DLEY KNOX LIBRARY
VAL POSTGRADUATE SCHOOL
ONTEREY, CALIF. 93940

# NAVAL POSTGRADUATE SCHOOL
## Monterey, California

# THESIS

AN INTERACTIVE COMPUTER PROGRAM
FOR THE PRELIMINARY DESIGN AND
ANALYSIS OF MARINE REDUCTION GEARS

by

Joseph Louis Paquette

March, 1982

Thesis Advisor: G. Cantin

Approved for public release; distribution unlimited.

T204258

## REPORT DOCUMENTATION PAGE

READ INSTRUCTIONS BEFORE COMPLETING FORM

1. REPORT NUMBER
2. GOVT ACCESSION NO.
3. RECIPIENT'S CATALOG NUMBER

4. TITLE (and Subtitle)
An Interactive Computer Program for the Preliminary Design and Analysis of Marine Reduction Gears

5. TYPE OF REPORT & PERIOD COVERED
Master's Thesis
March 1982

6. PERFORMING ORG. REPORT NUMBER

7. AUTHOR(s)
Joseph Louis Paquette

8. CONTRACT OR GRANT NUMBER(s)

9. PERFORMING ORGANIZATION NAME AND ADDRESS
Naval Postgraduate School
Monterey, California 93940

10. PROGRAM ELEMENT, PROJECT, TASK AREA & WORK UNIT NUMBERS

11. CONTROLLING OFFICE NAME AND ADDRESS
Naval Postgraduate School
Monterey, California 93940

12. REPORT DATE
March 1982

13. NUMBER OF PAGES
187

14. MONITORING AGENCY NAME & ADDRESS(if different from Controlling Office)

15. SECURITY CLASS. (of this report)
UNCLASSIFIED

15a. DECLASSIFICATION/DOWNGRADING SCHEDULE

16. DISTRIBUTION STATEMENT (of this Report)
Approved for public release; distribution unlimited.

17. DISTRIBUTION STATEMENT (of the abstract entered in Block 20, if different from Report)

18. SUPPLEMENTARY NOTES

19. KEY WORDS (Continue on reverse side if necessary and identify by block number)
Computer Aided Design; Marine Gear Design; Marine Gears; Helical Gears; Computer Aided Marine Gear Design; Conventional Parallel Axis Gears; Epicyclic Gears; REGAD; Computer Code

20. ABSTRACT (Continue on reverse side if necessary and identify by block number)

The objective of this project was to develop an interactive computer program providing flexibility in the design and analysis of marine propulsion gears. The program, Reduction Gear Analysis and Design (REGAD), will handle conventional parallel axis and simple epicyclic reduction gears. It is capable of

generating preliminary designs of new gear sets or of providing analyses of existing or proposed gear sets. Program development, organization, and operation are discussed.

Approved for public release; distribution unlimited.

# An Interactive Computer Program for the Preliminary Design and Analysis of Marine Reduction Gears

by

Joseph Louis Paquette
Lieutenant, United States Navy
B.S.S.E., United States Naval Academy, 1976

Submitted in partial fulfillment of the
requirements for the degree of

MASTER OF SCIENCE IN MECHANICAL ENGINEERING

from the

NAVAL POSTGRADUATE SCHOOL
March, 1982

DUDLEY KNOX
NAVAL PO
MONTEREY, CALI


## ABSTRACT

The objective of this project was to develop an interactive computer program providing flexibility in the design and analysis of marine propulsion gears. The program, Reduction Gear Analysis and Design (REGAD), will handle convential parallel axis and simple epicyclic reduction gears. It is capable of generating preliminary designs of new gear sets or providing analyses of existing or proposed gear sets. Program development, organization, and operation are discussed.

TABLE OF CONTENTS

I. INTRODUCTION - - - - - - - - - - - - - - - - - - - - 10

II. PROGRAM CAPABILITIES - - - - - - - - - - - - - - - - 12

A. SCOPE - - - - - - - - - - - - - - - - - - - - - - 12

B. LIMITATIONS AND OPTIONS - - - - - - - - - - - - - 13

III. PROGRAM ORGANIZATION AND OPERATION - - - - - - - - 15

A. REGAD FLOWPATHS - - - - - - - - - - - - - - - - - 15

B. MODULE IDENTIFICATION AND DESCRIPTION - - - - - - 15

1. MODULE ONE : INITIALIZATION AND SET-UP - - 15

A. REGAD - - - - - - - - - - - - - - - - - - 16

B. BLOCK DATA - - - - - - - - - - - - - - - - 16

C. SUBROUTINE DSCRPT - - - - - - - - - - - - 16

D. SUBROUTINE INPUT - - - - - - - - - - - - 16

E. SUBROUTINE AGMA - - - - - - - - - - - - - 16

2. MODULE TWO : PARALLEL AXIS - - - - - - - - - 17

A. SUBROUTINE PRLDES - - - - - - - - - - - - 17

B. SUBROUTINE PRLANL - - - - - - - - - - - - 18

C. SUBROUTINE PRLRES - - - - - - - - - - - - 18

D. SUBROUTINE PRLSIZ - - - - - - - - - - - - 18

E. SUBROUTINE PRLOUT - - - - - - - - - - - - 19

3. MODULE THREE : EPICYCLIC - - - - - - - - - - 19

4. Module Four : Computational Subprogram LIBRARY - - - - - - - - - - - - - - - - - - - 19

A. SUBROUTINE SUBPROGRAMS - - - - - - - - - 19

B. REAL FUNCTION SUBPROGRAMS - - - - - - - - 20

C. DATA TRANSFER - - - - - - - - - - - - - - - - - - - 21

D. PROGRAM OPERATION - - - - - - - - - - - - - - - - - 21

IV. CONCLUSIONS AND RECOMMENDATIONS - - - - - - - - - - 24

APPENDIX A: PROGRAM DEVELOPMENT - - - - - - - - - - - - 26

APPENDIX B: LIST OF PARAMETERS - - - - - - - - - - - - - 53

APPENDIX C: REGAD SAMPLE RUNS - - - - - - - - - - - - - 62

APPENDIX D: PROGRAM LISTING - - - - - - - - - - - - - - 94

APPENDIX E: FIGURES - - - - - - - - - - - - - - - - - - 173

LIST OF REFERENCES - - - - - - - - - - - - - - - - - - - 184

INITIAL DISTRIBUTION LIST - - - - - - - - - - - - - - - 186

LIST OF TABLES

1. Empirical Constants for Weight and Size FORMULATIONS - - - - - - - - - - - - - - - - - - - - 41

LIST OF FIGURES


1. Single Reduction Parallel Axis Arrangements - - - 173
2. Double Reduction Parallel Axis Arrangements - - - 174
3. Triple Reduction Parallel Axis Arrangements - - - 175
4. Single Reduction Epicyclic Arrangements - - - - - 176
5. Flow Chart of the REGAD Package - - - - - - - - - 177
6. EXTERNAL TOOTH DIMENSIONS - - - - - - - - - - - - 178
7. External Tooth Form Layout - - - - - - - - - - - 179
8. Fillet Center Location - Inside Base Circle - - - 180
9. Fillet Center Location - Outside Base Circle - - 181
10. Internal Tooth Dimensions - - - - - - - - - - - - 182
11. Internal Tooth Form Layout - - - - - - - - - - - 183

ACKNOWLEDGEMENT

I would like to express my sincere appreciation to Professor Gilles Cantin for his encouragement to pursue a topic in computer aided design and his time and assistance in this project. I would also like to express my gratitude for the help provided by Professor G. N. Vanderplaats.

I would especially like to acknowledge the contributions of my wife, Leslee. Her understanding and caring through my course of study, and particularly during the development of this project, provided the support that made the completion of this work possible.

# I. INTRODUCTION

In the conceptual stage of ship design, many parameters and options are considered. This is especially true with respect to the propulsion plant. Changes in hull design, displacement, and numbers of propellers all affect changes in the requirements for the propulsion plant. There are also various options under consideration in the propulsion plant: turbines or internal combustion engines, the number of engines, the auxiliaries required for support, etc. All of these will affect the initial design of the reduction gears. It is, therefore, important to be able to produce preliminary designs of reduction gears for the options under consideration.

Preliminary designs provide useful information on feasible arrangements and size without going into the specific design details dependent upon manufacturing. Since any number of preliminary designs may be required due to perturbations discussed above, it is important to be able to automate the design process. An interactive computer program providing various options would free the engineer from tedious, time consuming, and often error prone number manipulation and allow him to produce multiple designs for consideration. It would also provide a quick means of checking

the effects of various parameters in addition to the ability to analyze proposed designs or configurations.

Reduction Gear Analysis and Design (REGAD) was developed to fill this need. It is an interactive computer program offering close user control through numerous options. Being interactive, it provides a rapid means of designing or analyzing a gear set, thereby reducing the turn-around time inherent in the use of batch systems. The program was kept modularized and well documented for ease of maintenance and modification. The modularized construction also provides an additional benefit of being able to use this program on smaller computers by using an overlay scheme.

## II. PROGRAM CAPABILITIES

### A. SCOPE

REGAD was written to provide preliminary designs or analyses of marine propulsion reduction gears. It is incapable of providing detailed designs or performing detailed analyses since specifics of manufacturing are not reguired for input. The program does not consider shafting, bearings, lubrication, couplings, casings, or other auxiliaries. It will provide sizing information in the form of pitch diameters, effective facewidths, gear ratios, and numbers of teeth per gear. In addition, the program will provide estimates of loadings and stress levels. Estimated weight and dimensions of the gear set are also provided.

All computations are based primarily on the American Gear Manufacturers Association's standards [Ref. 1, 2, 3] using appropriate constants for marine propulsion gears [Ref. 4, 5]. As an option in the program, these constants can be replaced by the user to enable him to investigate other applications such as reduction gears for ships service or emergency generators.

## B. LIMITATIONS AND OPTIONS

Program application is limited to marine reduction gears with a maximum of three reduction stages. Conventional parallel axis and simple epicyclic arrangements with helical gears are possible. When dealing with epicyclics, it is assumed that load sharing of the planets is achieved and that the ring gear is suitably flexible. Efficiencies of the gear sets are not provided since power losses are not computed. While estimates of bending and contact stresses are provided, scoring can not be estimated since lubrication is not considered. REGAD does not require the K-factor as input as in previous programs since hardness ranges for the pinions and gears are required. However, the K-factors are computed and displayed for reference purposes. The weight estimates are based on actual designs and do not include turning gears, attached lubrication oil pumps, or other auxiliaries.

The following is a list of major options provided by the program:

(1) brief, on-line program description
(2) choice of design or analysis
(3) listing of preprogrammed constants and an ability to change selected constants of the user's choice
(4) choice of single, double, or triple reductions
(5) choice of single or double helical gears
(6) choice of six hardness ranges for gears and pinions

(7) conventional parallel axis arrangements (see Figures 1, 2, and 3)

(a) one or two power inputs

(b) single power path (articulated) or dual power paths (locked train)

(8) simple epicyclic arrangements (see Figure 4)

(a) choice of planetary or star arrangements

(b) single power input

(c) choice of three, four, or five planet/star gears.

## III. PROGRAM ORGANIZATION AND OPERATION

### A. REGAD FLOWPATHS

As stated previously, the program was designed in modular form with each module consisting of a number of subprograms. These modules are just conceptual groupings of associated subprograms, and are not related to actual program implementation on any specific computer. Figure 5 shows the basic flow paths of the program. Module One is for program initialization and problem set up. Module Two performs calculations for conventional parallel axis gear sets, while Module Three handles epicyclic gear sets. Module Four is a grouping of all the computational subprograms required by the other modules.

### B. MODULE IDENTIFICATION AND DESCRIPTION

This section provides a brief description of each subprogram in each module.

#### 1. Module One : Initialization and Set-up

Module One contains the subprograms necessary for initialization, execution, and initial data entry. It is, basically, the control module for the program. The following is a grouping of the subprograms in Module One.

a. REGAD

REGAD is the main program. It provides the options for either design or analysis and either parallel axis or epicyclic arrangements and controls the flow to the proper module. It then calls the required subprograms for execution of Modules One, and Two or Three.

b. BLOCK DATA

The BLOCK DATA subprogram initializes variables in each of the common blocks.

c. SUBROUTINE DSCRPT

This subroutine is called by REGAD after an affirmative response to a user option to provide a brief description of the REGAD package. It contains an option to stop the program if only a program description is desired.

d. SUBROUTINE INPUT

All options and initial design parameters are entered via this subroutine which is called by REGAD.

e. SUBROUTINE AGMA

The constants for marine propulsion gears required by various AGMA formulations are initialized in the BLOCK DATA subprogram, and can be listed as an option in REGAD. REGAD calls this subroutine after an affirmative user response to display the preprogrammed values. This subroutine then allows the user to selectively change any constant desired.

2. Module Two : Parallel Axis

This module contains all the major subprograms called by REGAD to provide an initial design or to perform an analysis of convential parallel axis reduction gears. The following is a grouping of the subprograms in Module Two.

a. SUBROUTINE PRLDES

This subroutine will produce a design of a parallel axis gear set. All pinion and gear diameters, effective facewidths, and gear ratios are computed using a basic random search optimization technique to find a feasible design by attempting to minimize a function of gear pair volume. It should be noted that, while attempting to minimize gear volume, the design is not necessarily optimized for minimum weight. The optimization technique is used here only to produce a feasible design in terms of dimension and power constraints by minimizing a function of gear pair volume. To produce a truly optimized design for minimum weight, a full optimization must include many more design variables such as helix and pressure angles, pitches, and hardnesses in addition to the dimensions. Additional constraints such as stress and unit load levels would need to be incorporated. All of this would require a more sophisticated and efficient optimization technique than is used here.

b. SUBROUTINE PRLANL

To analyze a proposed or existing design, REGAD will call this subroutine. It will request, as user-supplied input, the basic information calculated in PRLDES, i.e., pitch diameters and effective facewidths. Using this information, PRLANL will compute other parameters such as gear ratios, power and speed splits, and numbers of teeth per gear.

c. SUBROUTINE PRLRES

Immediately following a call to PRLDES or PRLANL, REGAD will call PRLRES to compute all remaining information such as expected loadings and stress levels. The user should be aware that the stress levels are computed according to AGMA formulations [Ref. 2 and 3] and take into account load distribution and overloads. This will produce levels that may seem high but are actually closer to actual levels to be expected in service.

d. SUBROUTINE PRLSIZ

REGAD calls this subroutine after PRLRES to compute estimates of gear set weight and gearbox dimensions. These estimates are determined by empirical relationships obtained from a rather limited data base of actual designs.

e. SUBROUTINE PRLOUT

This is the last subroutine called by REGAD in the parallel axis path. It provides a detailed output of the results obtained from the design or analysis including design parameters entered by the user, the dimensions of each component, expected loadings and stress levels, and configuration information.

3. Module Three : Epicyclic

Module Three contains all the major subprograms called by REGAD to design or analyze simple epicyclic reduction gears. Subroutines EPCDES, EPCANL, EPCRES, EPCSIZ, and EPCOUT are all analogous to those in Module Two. They perform the same functions, but for simple epicyclic gears. Therefore, individual descriptions will not be repeated here.

4. Module Four : Computational Subprogram Library

This module is an organizational grouping of all the subprograms called by those in Modules One, Two, and Three.

a. Subroutine Subprograms

The following are the subroutines used:

(1) GFI - subroutine to compute the AGMA durability geometry factor, I

(2) GFJ - subroutine to compute the AGMA strength geometry factor, J.

b. Real Function Subprograms

The following are the real function subprograms used:

(1) ARCCOS - computes the arc cosine of two arguments

(2) ARCSIN - computes the arc sine of two arguments

(3) AGMAE1 - uses LaGrangian interpolation of Table E-1 [Ref. 1] to compute the constants required for the stress concentration factor formulation

(4) CKDATA - called by SUBROUTINE AGMA to allow the user to change the preprogrammed constants

(5) POWERB - computes allowable service power based on AGMA strength rating [Ref. 3]

(6) POWERH - computes allowable service power based on AGMA durability rating [Ref. 2]

(7) RTFNDR - a modified version of FUNCTION ZEROIN [Ref. 6] used to find a zero of a function in a specified interval

(8) FALFA - the function required by SUBROUTINE GFJ and the zero of which is computed in FUNCTION RTFNDR

(9) SHRLD - computes the load sharing ratio, $m_N$

(10) THICK - computes tooth thickness at any diameter given a known thickness at a different diameter.

C. DATA TRANSFER

All data transfer between subprograms in Modules One, Two, and Three is via combinations of seven common blocks. Data transfer to and from subprograms in Module Four is via argument lists and common blocks as required. The following is a list of the common blocks used:

(1) /AGMAB/ : constants for AGMA strength formulations
(2) /AGMAH/ : constants for AGMA durability formulations
(3) /DESDAT/ : design parameters and options
(4) /DESPRL/ : parallel axis design information
(5) /RESPRL/ : parallel axis computational results
(6) /DESEPC/ : epicyclic design information
(7) /RESEPC/ : epicyclic computational results.

The variables in each common block along with their definitions can be found in Appendix B.

D. PROGRAM OPERATION

REGAD is an interactive program designed to allow the user to solve his problem at a terminal. Being interactive, the program has many options that control program execution, in addition to requests for data necessary for the execution

of the program. Each request for information will contain the necessary guidelines needed by the the user to respond. This may take the form of a mini-table containing information on each option choice, the range of values when a specific quantity is requested, or units, where applicable, of the requested data.

All option parameters are integer values and should not be entered with a decimal. Option codes entered by the user are checked for validity to ensure they fall within the allowed range. If two options are offered, enter a 1 or a 2. Any value entered less than one will automatically default to one, and any value greater than two will automatically default to two. In those cases where there are more than two options, the response is checked to see if it falls within the allowed range. If it does not, a message alerts the user to this fact and allows him to re-enter the correct code. Some questions require affimative or negative responses. To reply, use a Y for yes or an N for no. Use of other values may give undesirable results.

Every attempt has been made to anticipate possible error conditions. If one of these is encountered, a message is generated to inform the user. If the error encountered is a terminal error, the message will also indicate that the program run was aborted under program control.

A detailed development of this package is provided in Appendix A where specifics can be found. Appendix B provides a cross-reference of the variables used in Appendix A with those used in the program. It also contains detailed information on the common blocks. Sample runs of the program can be found in Appendix C, and a complete listing of the program is in Appendix D.

## IV. CONCLUSIONS AND RECOMMENDATIONS

Computer aided design (CAD) is an important and useful tool for engineers. As computer technology continues to expand, CAD will become increasingly available for the practicing engineer, allowing him to use his initiative in design instead of being a slave to the numbers involved. REGAD is such a tool for use in the preliminary design of marine reduction gears during the conceptual stages of propulsion plant design.

REGAD could become even more useful if additional options are provided. A module to perform sensitivity analyses of a given design would greatly enhance the use of this program. This option would allow the user to start with any design and vary a selected variable over a specified range to determine its impact on the design. It could also be used to "fine tune" a design by modifying selected parameters to produce the results desired without having to rerun the program for each modification. Graphics would add another dimension by providing graphical displays of the gear arrangements and of certain data such as the results of a sensitivity analysis. A module to handle various composite designs of parallel axis and epicyclic gears would be an important addition. Also, it is recommended that a larger

data base be collected to provide more accurate empirical constants for the weight and gearbox size estimates.

# APPENDIX A

## PROGRAM DEVELOPMENT

With the exception of several general conversion relationships, all computations are accomplished in Modules Two and Three with calls to subprograms in Module Four. The analytical relationships used in the program will be examined, however, most of the relations used can be easily found in the literature and in various texts, so background developments will not be given.

### I. GENERAL RELATIONSHIPS

The following relationships are used in Module One and in various other subprograms. The transverse diametral pitch of any gear is the ratio of its number of teeth to its pitch diameter;

$$P_d = \frac{N}{d} \tag{1}$$

The normal and transverse diametral pitches are related by;

$$P_d = P_{nd} \cos \psi \tag{2}$$

and the pressure angles by;

$$\tan \phi_n = \tan \phi_t \cos \psi \qquad (3)$$

Axial pitch is defined as;

$$p_x = \frac{\pi}{P_{nd} \sin \psi} = \frac{\pi}{P_d \tan \psi} \qquad (4)$$

## II. CONVENTIONAL PARALLEL AXIS FORMULATIONS

Subroutines PRLANL and PRLDES each provide the pitch diameters of the pinions and gears, the effective face-widths, the stage reduction ratios, the numbers of teeth per gear, speed and power splits, and the geometry factors to subroutines PRLRES and PRLSIZ to compute all further information. The speed splits are the actual speeds of the individual gears and a power split is the actual power transferred by a gear. The strength and durability geometry factors are computed in separate subroutines in Module Four and will be discussed later.

### A. COMMON RELATIONSHIPS

Power splits are determined from the configuration. For a single power path configuration, the power is transferred equally from the pinion to the gear, where in a dual power path configuration, the pinion transfers one half its power

to each of two gears. These splits are computed exactly since losses are neglected.

Speed splits and stage reduction ratios are based on;

$$m_G = \frac{D}{d} = \frac{n_G}{n_p} \tag{5}$$

Numbers of teeth on each gear are computed from the equation below and are rounded to the nearest integer.

$$N = d \times P_d \tag{6}$$

B. DETERMINATION OF DIAMETERS AND FACEWIDTHS

All diameters and facewidths are entered by the user in subroutine PRLANL. Stage gear ratios, power and speed splits and numbers of teeth per gear are computed as discussed in the previous section.

In subroutine PRLDES, the diameters, facewidths, and stage gear ratios are determined by using a basic local random search optimization technique to produce a feasible design. This algorithm requires an initial design to start.

The initial design is based on Dudley's [Ref. 7] formulation for preliminary estimates of gear size;

$$C^2F = \frac{31500}{K} \frac{Pwr}{n_p} \frac{(m_G+1)^3}{m_G} \tag{7}$$

$$C = \frac{d}{2} (m_G + 1) \tag{8}$$

By substituting equation 8 into equation 7, a formula for estimating pinion diameter is obtained;

$$d^3 = \frac{126000}{n_p K} \frac{Pwr}{(F/d)} \frac{(m_G + 1)}{m_G} \tag{9}$$

where F/d = 1.0 for single helical gears and F/d = 2.25 for double helical gears. The term K is the K-factor which is an indication of durability. An expression for estimating K is provided by Thoma [Ref. 4];

$$K \leq \left( \frac{S_{ac} \times 10^{-4}}{C_R} \right)^2 \times \left( \frac{2.80}{C_o C_m} \right) \tag{10}$$

where the constants used are the AGMA durability constants. The K-factor in equation 10 is for the second reduction. For the first reduction, multiply K from equation 10 by 1.20. The initial estimates for the stage gear ratios are:

(1) single reduction $m_G = M_o$

(2) double reduction $m_{G_2} = \sqrt{M_o} + 3$ dual power path

$m_{G_2} = \sqrt{M_o} - 1$ single power path

$m_{G_1} = \sqrt{M_o} / m_{G_2}$

(3) triple reduction $m_{G_2} = \sqrt[3]{M_o}$

$m_{G_3} = \sqrt[3]{M_o} + 3$

$m_{G_1} = \sqrt[3]{M_o} / m_{G_2} m_{G_3}$ .

The initial facewidths used are:

(1) single helical gears $F = d$

(2) double helical gears $F = 2.25\ d$.

With this initial design as a starting point for the random search algorithm, successive designs are determined by randomly adding small amounts of between +1.0 and -1.0 to the diameters, facewidths, and stage gear ratios. These small amounts are scaled to take into account the difference in range of values for each variable. This process will attempt to find a feasible design in which all specified constraints are satisfied. If the initial design violates one or more constraints, the design that violates them the least in succeeding iterations will be kept until a design satisfying all constraints is found. Once a feasible design is found, an attempt to improve this design is made by trying to reduce the size of the gears by minimizing a function of gear pair volume;

$$\text{Volume} = \sum\sum C^2 F = \sum\sum \left[\tfrac{1}{4}(m_G+1)^2 d^2 F\right] \qquad (11)$$

The interior summation is over the number of reduction stages, and the exterior summation is over the number of power inputs. The constraints imposed which determine the limits on each of the designs are:

(1) actual transmitted power is less than or equal to the allowable service power in accordance with references 2 and 3

(2) maximum gear diameter of 200 inches due to manufacturing limitations

(3) minimum facewidth greater than four axial pitches to ensure proper helical action

(4) maximum facewidth less than the pinion pitch diameter for a single helical gear or 2.25 times the pinion pitch diameter for a double helical gear

(5) pinions and gears in succeeding reduction stages are to be larger than those in the previous stage due to the greater amounts of torque carried

(6) in dual power path arrangements, the gear ratio for each reduction stage is greater than the preceeding stage due to the torque carried.

The design obtained can than be adjusted by the user as desired by changing parameters with the analysis option.

## III. EPICYCLIC FORMULATIONS

As in Module Two, the pitch diameters, effective face-widths, stage reduction ratios, numbers of teeth, speed and power splits, and the geometry factors are all entered or computed in the analysis or design subroutines (EPCANL or EPCDES) for use in the final computations subroutines (EPCRES and EPCSIZ). Here, the speed splits are the rotational speeds of the sun and planet gears and of either the ring gear or the carrier, depending on the configuration. Planetary arrangements have fixed ring gears while star arrangements have fixed carriers. Also, the direction of rotation must be considered. Star arrangements reverse the direction of rotation of the input and the planetary arrangements will maintain direction of rotation. Assuming equal load sharing of the planets and neglecting losses, power splits are straightforward. The input and output powers are equal while each planet carries an equal share of the total power. Load sharing is an important consideration in the design of epicyclic gears, and must be assured in marine reduction gears due to the high power levels experienced. Equal load sharing of the planets can be reasonably achieved in several different ways. One method requires the sun gear to float, supported only by the planet gears, with

a relatively flexible ring gear to allow for inaccuracies in the teeth. There are also mechanical devices available to assist in achieving an equal division of the load. Experience has shown, for marine applications, that three to five planets with stage ratios in the range of two to eight work best.

## A. COMMON RELATIONSHIPS

Unlike conventional parallel axis arrangements, there are specific numerical rules governing the proper assembly and operation of an epicyclic gear set. These involve the selection of the numbers of teeth and planets along with computing the various speed ratios. Mesh frequencies are also configuration dependent as seen in a following section.

There are basically three relationships that must be satisfied to ensure proper assembly and operation. The first is a relationship defining the speed ratio of the epicyclic stage since it is not merely the ratio of numbers of teeth or diameters as in a conventional parallel axis gear set. The second relationship requires the ring gear diameter to be equal to the sum of the sun gear diameter and twice a planet gear's diameter. This ensures the planets' ability to fit between the sun and ring gear. For the final relationship, it can be shown geometrically that the sum of the numbers of teeth on the sun gear and ring gear must be

an integral multiple of the number of planets in the gear set to ensure proper alignment and meshing of all teeth. It should be noted that these relationships are based on equally spaced planets around the sun gear. The above relationships are conveniently expressed in terms of numbers of teeth on each gear as seen in references 7 and 8. The speed ratio for a planetary arrangement is;

$$m_G = \frac{n_o}{n_i} = \frac{N_R}{N_S} + 1 \qquad (12)$$

and for a star arrangement;

$$m_G = \frac{-n_o}{n_i} = \frac{-N_R}{N_S} \qquad (13)$$

where the negative sign indicates the star arrangement's reversal of rotational direction of the input. The rotational speed of the planet gears is required for the design of their bearings and can be determined by;

$$n_{PLN} = \frac{N_R}{N_{PLN}} n_o \qquad (14)$$

where $n_o$ in each equation above is the speed of the carrier for a planetary arrangement or is the ring gear's speed for a star arrangement. The assembly and meshing relations in terms of tooth numbers are;

$$N_R = N_S + 2\ N_{PLN} \tag{15}$$

and;

$$N_R + N_S = k\ NP \tag{16}$$

where k is an integer and NP is the number of planets.

## B. DETERMINATION OF DIAMETERS AND FACEWIDTHS

The random search technique discussed for conventional parallel axis gears is used to provide the epicyclic diameters, facewidths, and stage gear ratios. Equation 9 is used to provide an initial estimate of sun gear diameters where $m_G$ is replaced by the ratio of the planet's pitch diameter to the sun's pitch diameter. This value is usually in the range of 1.5 to 3; therefore, a random number in this range is used to start the problem. Once the sun gear diameter is estimated, the other diameters can be found using the relationships in equations 12 to 16. The initial estimates for the stage gear ratio are the roots of the overall ratio corresponding to the number of reduction stages. For example, $m_{G_1}$ and $m_{G_2}$ for a double reduction gear set would be the square root of the overall ratio. Initial facewidths are chosen as before. The initial estimates of the diameters, facewidths, and the gear ratios provide a starting point for

the random search algorithm discussed previously. Again, the method will attempt to improve feasible designs by minimizing a function of gear volume;

$$\text{Volume} = \sum (NP \cdot d_{PLN}^2 + d_S^2 + d_R^2) \cdot F \qquad (17)$$

where the summation is over the number of reduction stages. The constraints imposed are similar to those for the parallel axis gears:

(1) actual transmitted power is less than or equal to the allowable service power in accordance with references 2 and 3

(2) maximum ring gear diameter of 150 inches due to manufacturing limitations

(3) minimum facewidth greater than four axial pitches to ensure proper helical action

(4) maximum facewidth less than the sun's pitch diameter for a single helical gear or 2.25 times the sun's pitch diameter for a double helical gear

(5) planet gears are to be larger than sun gears due to the greater amounts of torque carried

(6) stage gear ratios are to be between 2 and 8 for each reduction stage.

As before, once a design is obtained, the user can utilize the analysis option to obtain the desired results.

## IV. COMPUTATIONAL RESULTS AND DESIGN INFORMATION

Once the geometry is determined in the analysis or design subroutines, the computational results subroutine (PRLRES or EPCRES) and the size estimates subroutine (PRLSIZ or EPCSIZ) are called to provide design information concerning tooth loads, stresses, and other configuration, geometry, and size information. This section describes the formulations used.

The facewidth to diameter ratio is computed using the effective facewidth and the pitch diameter of the pinion for parallel axis gears or the sun gear for epicyclics. Center distance is taken as the average of the pinion and gear pitch diameters. A center distance is computed for epicyclics by finding the average of the sun and a planet gears' pitch diameters.

Pitchline velocity, V, is determined by;

$$V = \frac{\pi \, d \, n_p}{12} \tag{18}$$

where V is in feet per minute, d is in inches, and $n_p$ is in revolutions per minute. The tangential component of tooth load, $W_t$, is computed from;

$$W_t = \frac{126000\ Pwr}{n_p\ d} \tag{19}$$

where $W_t$ is in pounds-force, Pwr is in horsepower, and d and $n_p$ are as before. Tooth loading per inch of facewidth is computed from;

$$\text{Tooth Load per Inch} = W_t / F \tag{20}$$

and the unit load, a normalized value of the load per inch above, is;

$$\text{Unit Load} = \frac{W_t\ P_{nd}}{F} \tag{21}$$

where the unit load is expressed in pounds-force per square inch.

Mesh frequencies provide information on how often a tooth is loaded. Mesh frequencies for parallel axis gears are determined by;

$$f = \frac{N_p\ n_p}{60} \tag{22}$$

with f expressed in Hertz. For epicyclic gears, the following are used:

$$\text{(a)}\quad f_S = \frac{NP \quad N_R}{N_R + N_S}\, n_S \qquad \text{(d)}\quad f_S = NP\ n_S$$

$$\text{(b)}\quad f_P = \frac{N_R}{N_{PLN}}\,\frac{N_S}{N_R + N_S}\, n_S \qquad \text{(e)}\quad f_P = 2\,\frac{N_S}{N_{PLN}}\, n_S \qquad (23)$$

$$\text{(c)}\quad f_R = \frac{NP \quad N_S}{N_R + N_S}\, n_S \qquad \text{(f)}\quad f_R = NP\,\frac{N_S}{N_R}\, n_S$$

where (a) through (c) are for planetary arrangements and (d) through (f) are for star arrangements.

The K-factor is computed for reference purposes by;

$$K = \frac{W_t}{F\ d}\,\frac{(m_G + 1)}{m_G} \qquad (24)$$

The contact stresses are computed according to reference 2 by;

$$s_c = C_p \sqrt{\frac{W_t\ C_o}{C_v}\,\frac{C_s}{d\ F}\,\frac{C_m\ C_f}{I}} \qquad (25)$$

Bending stresses are computed according to reference 3 by;

$$s_t = \frac{W_t\ K_o}{K_v}\,\frac{P_d}{F}\,\frac{K_s\ K_m}{J} \qquad (26)$$

Individual torques, T, are found by;

$$T = \frac{W_t \; d}{2000} \tag{27}$$

while the total output torgue is computed by;

$$T = \frac{63 \; SHP}{n_p} \tag{28}$$

where T has the units of thousands of inch-pounds-force in both cases. Shaft horsepower, SHP, is the total power transferred to the output shaft.

Weight and size estimates are based on empirical relations obtained from a limited number of actual designs. The relations used are;

$$\begin{aligned} \text{Weight} &= C1 \cdot [\textstyle\sum (d^2 F)\,]^{C2} \\ \text{Length} &= C3 \cdot \textstyle\sum F \\ \text{Width} &= C4 \cdot D \\ \text{Height} &= C5 \cdot D \end{aligned} \tag{29}$$

where the constants used are found in Table 1. All dimensions are in inches and the weight is in pounds-force rounded to three significant figures.

Table 1: Empirical Constants for Weight and Size Formulations

| Constant | Parallel Axis | Epicyclic |
|---|---|---|
| C1 | 1196.0 | 0.905 |
| C2 | 0.34 | 0.89 |
| C3 | 2.26 | 2.85 |
| C4 | 1.20 | 1.30 |
| | 1.37 | -- |
| C5 | 1.28 | 1.20 |
| D | Bull Gear Diameter | Ring Gear Diameter |

first C4: for single power inputs
second C4: for double power inputs

## V. COMPUTATIONAL SUBPROGRAMS LIBRARY FORMULATIONS

The formulations provided below are for the major computational subprograms in Module Four. Those that are self-explanatory or are not computational in nature are only described in general.

### A. ARCCOS AND ARCSIN

These function subprograms find the arc cosine and arc sine, respectively, for any two arguments. They were added for convenience since not all compilers have them as internal functions.

B. AGMAE1

This function subprogram returns the value of the constants H, L, and M required for the determination of the stress concentration factor, $K_f$, according to reference 1, for use in computing the strength geometry factor, J. Table E-1 in reference 1 provides the tabulated data necessary to perform a LaGrangian interpolation for each constant for a specified normal pressure angle in degrees. The interpolation formula used is;

$$F(\phi_n) = \frac{(\phi_n-20)(\phi_n-14.5)}{57.75} F_1 + \frac{(\phi_n-14.5)(\phi_n-25)}{-27.50} F_2 + \frac{(\phi_n-14.5)(\phi_n-20)}{52.50} F_3 \qquad (30)$$

where F represents the appropriate values of H, L, or M.

C. CKDATA

FUNCTION CKDATA is called by subroutine AGMA to allow the user to selectively change the preprogrammed constants by checking if the value entered is zero. If it is zero, the current value of the specified constant is not changed. This provides for flexibility in changing constants with multiple values, and it guards against inadvertantly entering a value of zero.

D. POWERB AND POWERH

These function subprograms are used to compute the maximum allowed service power, in horsepower, that can be transmitted by a gear according to references 2 and 3. The formulation based on the strength rating is;

$$P = \frac{n \; d \; K_v}{126000 \; SF \; K_o} \; \frac{F}{K_m} \; \frac{J}{K_s \; P_d} \; \frac{S_{ac} \; K_L}{K_R \; K_T} \qquad (31)$$

and the durability rating formulation is;

$$P = \frac{n \; d}{126000 \; SF} \; \frac{I \; C_v}{C_s \; C_f \; C_o \; C_m} \left[ \frac{S_{at} \; d}{C_p} \; \frac{C_L \; C_H}{C_R \; C_T} \right]^2 \qquad (32)$$

where J and I are the respective geometry factors, F is the effective facewidth, n is the speed of d in revolutions per minute, and d is the pinion pitch diameter for parallel axis or is the sun pitch diameter for epicyclics. All other values are the preprogrammed constants.

E. RTFNDR AND FALFA

The function subprogram RTFNDR, a slightly modified version of FUNCTION ZEROIN [Ref. 6], is used to find the value of the root of the equation programmed in function FALFA. This root is required by the subroutine GFJ for the computation of the strength geometry factor, J.

F. SHRLD

This function subprogram computes the load sharing ratio used in computing the geometry factors. The load sharing ratio, $m_N$, is determined by;

$$m_N = \frac{p_N}{.95\ Z} = \frac{\pi \cos \phi_n}{.95\ Z\ P_{nd}} \tag{33}$$

where Z is the length of action defined as;

$$Z = \frac{1}{2}\left(\sqrt{D_o^2 - D_b^2} + \sqrt{d_o^2 - d_b^2} - \sqrt{D^2 - D_b^2} - \sqrt{d^2 - d_b^2}\right) \tag{34}$$

The subscripts on the pitch diameters are:

(1) o : outside diameter; $d_o = d + (2/P_d)$

(2) b : base diameter; $d_b = d \cos \phi_t$

For epicyclics, replace the outside diameters is equation 34 with inside diameters : $d_i = d - (2/P_d)$.

G. THICK

FUNCTION THICK returns the value of the normal arc thickness of a tooth at a specified diameter given a thickness at another diameter. For external gears;

$$t_2 = d_2\left((t_1/d_1) + \text{inv}\,\phi_1 - \text{inv}\,\phi_2\right) \tag{35}$$

and for internal gears;

$$t_2 = d_2\left((t_1/d_1) - \text{inv}\,\phi_1 + \text{inv}\,\phi_2\right) \tag{36}$$

where the subscript 2 represents the desired point and subscript 1 represents the known point. The involute function is defined as;

$$\text{inv } x = \tan x - x \tag{37}$$

The arguments of the involute functions in equations 35 and 36 are the transverse pressure angles at the points under consideration. The pressure angle at the desired point is defined as;

$$\cos \phi_2 = \frac{d_1 \cos \phi_1}{d_2} \tag{38}$$

The known point is usually taken at the pitch circle where $d_1 = d$, $\phi_1 = \phi_n$, and $t_1$ is defined as

$$t = \frac{P_n}{2} = \frac{\pi}{2 P_d} \cos \psi \tag{39}$$

H. GFI

This subroutine is used to compute the AGMA durability geometry factor, I, in accordance with reference 2. The geometry factor is defined as;

$$I = \frac{\cos \phi_t \sin \phi_t}{2 m_N} \frac{m_G}{(m_G \pm 1)} \tag{40}$$

where $m_N$ is computed by function SHRLD described above. The plus sign applies to external gears and the minus sign applies to internal gears.

I. GFJ

SUBROUTINE GFJ is used to compute the AGMA strength geometry factor, J, in accordance with reference 1 with one major difference: the values used are from analytical developments and are not scaled to a normal diametral pitch of one as are the values used in a graphical layout discussed in reference 1. The strength geometry factor is defined as;

$$J = \frac{Y_C \cos^2 \psi}{K_f \quad m_N} \tag{41}$$

The load sharing ratio, $m_N$, is computed in FUNCTION SHRLD. The stress concentration factor, $K_f$, is determined from;

$$K_f = H + \left(\frac{t}{r_f}\right)^L \cdot \left(\frac{t}{h}\right)^M \tag{42}$$

where H, L, and M are determined in FUNCTION AGMAE1. The value of the root fillet radius, $r_f$, is;

$$r_f = r_T + \frac{(b - r_T)^2}{(d/2\cos^2 \psi) + (b - r_T)} \tag{43}$$

with the dedendum, $b = 1.25/P_d$, and the root tip radius,

$r_T \cong 0.28/P_{nd}$. The values of t and h are determined from the anlytical geometry of the tooth form layout described below.

The tooth form factor, Y , is defined as;

$$Y_C = P_{nd}\left[\frac{\cos \phi_{Ln}}{\cos \phi_n}\left(\frac{1.5}{x\ C_h} - \frac{\tan \phi_{Ln}}{t}\right)\right]^{-1} \qquad (44)$$

where t and x are also from the tooth form layout mentioned previously. The helical factor, $C_h$, is defined as;

$$C_h = \left[1 - \frac{\nu}{100}\left(1 - \frac{\nu}{100}\right)\right]^{-1} \qquad (45)$$

where $\tan \nu = \tan \psi \ \sin \phi_n$ for $\psi \leq 50^o$. The normal load pressure angle at the tip of the tooth, $\phi_{Ln}$, can be seen in figures 6 and 7 and is given by;

$$\phi_{Ln} = \cos^{-1}\left(\frac{d_b}{d_o}\right) \pm \frac{t_o}{d_o} \qquad (46)$$

where the subscript o pertains to the point on the outside diameter and subscript b pertains to the base circle. The plus sign applies to internal gears and the minus, to external. The thickness, $t_o$, at the outside diameter is determined by function THICK. For internal gears, replace the outside values with the inside values as before.

The graphical tooth form layout is a method by which the variables h, t, and x can be determined from actual

measurements of a tooth form drawn and scaled for a normal diametral pitch of one for the case where tooth loading is at the tip. Loading at the tip of the tooth is the general practice for considering loads on helical gears. Refer to Figure 7 for the meanings of h, x, and T where t = 2T. Before determining h, x, and T analytically, several reference parameters must be determined as suggested by McIntire and Lyon [Ref. 9]. The first is the radius from the center of the gear to the tip of the inscribed Lewis stress parabola which is point E in Figure 7. This point is the intersection of the line of action of the tip load, tangent to the base circle, with the tooth centerline. The radius to this point is;

$$r_v = \frac{d_v}{2} = \frac{d_b}{2\cos \phi_{Ln}} \tag{47}$$

An additional reference point is required to fix the geometry. The center of of the root fillet is taken as this point which can be obtained by a very close approximation. To locate this point, the gear center is taken as the origin of a cartesian coordinate system with the tooth centerline as the vertical axis. Two possible cases exist for the location of this point with respect to the base circle. Figure 8 shows the case where the point is inside the base circle and Figure 9 shows the case where it is outside. The

coordinates of this point, (XC,YC), can be found from Figures 8 and 9. For both cases it can be seen in Figures 8 and 9 that;

$$HYP = d_R + r_f \tag{48}$$

where $d_R = d - 2b = d - (2.5/P_d)$. From Figure 6, the angle, $\epsilon$, is;

$$\epsilon = \text{inv}\,\phi + \sin^{-1}\frac{t_c}{d} \tag{49}$$

where $t_c$ is the chordal tooth thickness given by;

$$t_c = t - \frac{t^3 \cos^2\psi}{6\ d^3} \tag{50}$$

and t is the normal arc tooth thickness defined earlier. For the case in Figure 8;

$$\begin{aligned} XX &= (HYP)\sin\epsilon \\ XC &= XX + r_f \qquad \text{(a)} \\ YC &= \sqrt{HYP^2 - XC^2} \qquad \text{(b)} \end{aligned} \tag{51}$$

and for the case in Figure 9;

$$\phi_1 = \cos^{-1} \frac{(d_b/2)}{HYP}$$

$$OPP_1 = (HYP) \sin \phi_1$$

$$OPP_2 \cong OPP_1 - r_f$$

$$HYP_1 = \sqrt{OPP^2 + (d_b/2)^2}$$

$$\phi_2 = \cos^{-1} \frac{(d_b/2)}{HYP_1}$$

$$\lambda = \phi_1 \pm \text{inv}\, \phi_2 - \phi_2$$

"-" for external gears
"+" for internal gears (see Figure 11)

$$\delta = \lambda + \epsilon$$

$$XC = (HYP) \sin \delta \qquad \text{(a)}$$

$$YC = (HYP) \cos \delta \qquad \text{(b)} \qquad (52)$$

With the reference values of $r_f$, XC, and YC determined, the values of h, t=2T, and x can be analytically determined. From Figure 7;

$$XT = r_f \cos \alpha \qquad (53)$$

$$YH = r_f \sin \alpha \qquad (54)$$

$$h = r_v - YC + YH = r_v - YC + r_f \sin \alpha \qquad (55)$$

$$T = (t/2) = XC - XT = XC - r_f \cos \alpha \qquad (56)$$

$$YK = \frac{T}{\tan \alpha} \tag{57}$$

where $\alpha$ must be determined such that;

$$YK = 2h \quad \text{or} \quad YK - 2h = 0 \tag{58}$$

Substituting equations 53 through 57 into 58 yields;

$$F(\alpha) = XC - r_1 \cos \alpha - 2\tan \alpha \ (r_2 - YC + r_1 \sin \alpha) = 0 \tag{59}$$

Equation 59 is the function in FALFA called by RTFNDR to solve for $\alpha$. Once $\alpha$ is determined, h can be determined from equation 55 and T and t from equation 56. To obtain x, observe the following;

$$\gamma = \tan^{-1} (h/T)$$

$$\gamma_1 = (\pi/2) - \gamma$$

and

$$x = T \tan \gamma_1 \tag{60}$$

While not precise, the identical methodology is used for internal gears. Figures 10 and 11 apply. The expressions for internal gears are given without further development;

$$
\begin{aligned}
h &= -r_v + YC + r_f \sin \alpha \\
T &= XC - r_f \cos \alpha \\
t &= 2T \\
\gamma &= \tan^{-1} (h/T) \\
\gamma_1 &= (\pi/2) - \gamma \\
x &= T \tan \gamma_1
\end{aligned}
\tag{61}
$$

The values for h, t, and x are now used to determine the stress concentration factor, equation 42, and the tooth form factor, equation 44, required to compute the strength geometry factor, J, in equation 41.

# APPENDIX B

## LIST OF PARAMETERS

While it is not practical to list all variables used in the formulations or the program, it is useful to provide a list of the major variables with a cross-reference between the analytical names and the FORTRAN names. A detailed listing of each common block is also useful when studying the program.

### I. PARAMETER CROSS-REFERENCE

This section provides a listing of parameters with both their analytical and FORTRAN names.

| Math Symbol | FORTRAN Name | Variable Definition |
|---|---|---|
| $K_L$ | AKL | life factor |
| $K_m$ | AKM | load distribution factor |
| $K_o$ | AKO | overload factor |
| $K_R$ | AKR | reliability factor |
| $K_s$ | AKS | size factor |
| $K_T$ | AKT | temperature factor |
| $K_v$ | AKV | dynamic factor |
| SF | SFB | service factor |
| C | CDE | center distance (theoretical) (in) |

| | | |
|---|---|---|
| | CDP | (E=epicyclic, P=parallel axis) |
| $C_f$ | CF | surface finish factor |
| $C_H$ | CH | hardness factor |
| $C_L$ | CL | life factor |
| $C_m$ | CM | load distribution factor |
| $C_o$ | CO | overload factor |
| $C_p$ | CP | elastic properties factor |
| $C_R$ | CR | reliability factor |
| $C_s$ | CS | size factor |
| $C_T$ | CT | temperature factor |
| $C_v$ | CV | dynamic factor |
| SF | SFH | service factor |
| $\psi$ | DHELIX | helix angle (deg) |
| | HELIX | helix angle (rad) |
| $\phi_t$ | DPHI | transverse pressure angle (deg) |
| | PHI | transverse pressure angle (rad) |
| $\phi_n$ | DPHIN | normal pressure angle (deg) |
| | PHIN | normal pressure angle (rad) |
| D | DG | diameter of gear (in) |
| d | DP | diameter of pinion (in) |
| $d_{PLN}$ | DPLN | diameter of planet gears (in) |
| $d_R$ | DR | diameter of ring gear (in) |
| | | root diameter of a gear (in) |
| $d_S$ | DS | diameter of sun gear (in) |
| F | FACEE | facewidth (in) |
| | FACEP | (E=epicyclic, P=parallel axis) |

| | | |
|---|---|---|
| F/d | FBYDE | f/d ratio (facewidth/diameter) |
| | FBYDP | (E=epicyclic, P=parallel axis) |
| I | GEOMI | duribility geometry factor (pinion) |
| | GI | durability geometry factor (sun) |
| J | GEOMJG | strength geometry factor (gear) |
| | GEOMJP | strength geometry factor (pinion) |
| | GJS | strength geometry factor (sun) |
| | GJPL | strength geometry factor (planet) |
| K | KFCTRE | computed k-factor |
| | KFCTRP | (E=epicyclic, P=parallel axis) |
| f | MFE | mesh frequency (Hz) |
| | MFP | (E=epicyclic, P=parallel axis) |
| $M_o$ | MGOE | overall reduction ratio |
| | MGOP | (E=epicyclic, P=parallel axis) |
| $m_G$ | MGE | stage reduction ratio |
| | MGP | (E=epicyclic, P=parallel axis) |
| $N_G$ | NG | number of teeth, gear |
| $N_P$ | NP | number of teeth, pinion |
| NP | NPLNT | number of planet gears in epicyclic set |
| $N_{PLN}$ | NPLN | number of teeth, planet |
| $N_R$ | NR | number of teeth, ring |
| $N_S$ | NS | number of teeth, sun |
| $P_d$ | PD | transverse diametral pitch |
| $P_{nd}$ | PND | normal diametral pitch |
| V | PLVE | pitch line velocity (fpm) |
| | PLVP | (E=epicyclic, P=parallel axis) |

| | | |
|---|---|---|
| Pwr | PWRE | power split per gear pair (hp) |
| | PWRP | (E=epicyclic, P=parallel axis) |
| $n_{in}$ | RPMIN | source speed input (rpm) |
| $n_{out}$ | RPMOUT | output shaft/propeller speed (rpm) |
| $n_i$ | RPMI | stage input speed, epicyclic (rpm) |
| $n_o$ | RPMO | stage output speed, epicyclic (rpm) |
| $n_{PLN}$ | RPMPL | planet speed, epicyclic (rpm) |
| $n_P$, $n_G$ | RPMP | stage pinion and gear speed, parallel axis (rpm) |
| $s_{ac}$ | SAC | allowable contact stress number |
| $s_{at}$ | SAT | allowable bending stress number |
| SHP | SHP | shaft horsepower, output (hp) |
| $s_t$ | SIGBE | bending stress (psi) |
| | SIGBP | (E=epicyclic, P=parallel axis) |
| $s_c$ | SIGHE | contact stress (psi) |
| | SIGHP | (E=epicyclic, P=parallel axis) |
| T | TORQE | torgue (k in-lb) |
| | TORQP | (E=epicyclic, P=parallel axis) |
| $W_t$ | WTE | tangential tooth load (lb) |
| | WTP | (E=epicyclic, P=parallel axis) |

## II. COMMON BLOCK DETAILS

The following provides information concerning the variables in each common block. The numbers in parentheses are the size of the array where applicable.

COMMON BLOCK AGMAB (FOR STRENGTH RATING)

```
SFB   : R*4 (2,2); service factor
AKV   : R*4;       dynamic factor
AKS   : R*4;       size factor
AKM   : R*4;       load distribution factor
AKO   : R*4 (2);   overload factor
SAT   : R*4 (6);   allowable bending stress number
AKL   : R*4 (2);   life factor
AKR   : R*4 (6);   reliability factor
AKT   : R*4;       temperature factor
```

COMMON BLOCK AGMAH (FOR DURABILITY RATING)

```
SFH   : R*4 (2,2); service factor
CV    : R*4 (3);   dynamic factor
CS    : R*4;       size factor
CM    : R*4 (2);   load distribution factor
CF    : R*4;       surface finish factor
CO    : R*4 (2);   overload factor
SAC   : R*4 (6);   allowable contact stress number
CP    : R*4;       elastic properties factor
CL    : R*4 (2);   life factor
CH    : R*4;       hardness factor
CT    : R*4;       temperature factor
CR    : R*4 (6);   reliability factor
```

COMMON BLOCK DESDAT (DESIGN PARAMETERS, INPUT)

```
PWRIN : R*4 (2);    source power input (hp)
RPMIN : R*4 (2);    source speed input (rpm)
RPMOUT: R*4;        output shaft/propeller speed (rpm)
DHELIX: R*4 (3);    helix angle (deg)
HELIX : R*4 (3);    helix angle (rad)
PD    : R*4 (3);    transverse diametral pitch
PND   : R*4 (3);    normal diametral pitch
DPHI  : R*4 (3);    transverse pressure angle (deg)
PHI   : R*4 (3);    transverse pressure angle (rad)
DPHIN : R*4 (3);    normal pressure angle (deg)
PHIN  : R*4 (3);    normal pressure angle (rad)
NDIFP : I*4;        number of different power sources
IARR  : I*4;        arrangement code (1=parallel axis,
                    2=epicyclic)
IEPIC : I*4 (3);    epicyclic code (1=planetary, 2=star)
IHARD : I*4 (3,2); hardness range code (1-6, see SUBR.
                    AGMA)
IOPRO : I*4;        operational profile code (1=naval pro-
                    file full power 5% max; 2=other, max
                    power continuous)
NPWRIN: I*4;        number of power sources (inputs)
IPWRSR: I*4 (2);    power source code (1=turbine or motor,
                    2=multicylinder internal combustion
                    engine)
NRED  : I*4;        number of reduction stages
```

```
NPATH : I*4;        number of power paths (1=single,2=dual)
NPLNT : I*4 (3);    number of planet gears in epicyclic set
NHELX : I*4;        number of helicies (1=single, 2=double)
```

COMMON BLOCK DESEPC (EPICYCLIC DESIGN PARAMETERS)

```
MGOE  : R*4;        overall reduction ratio
MGE   : R*4 (3);    stage reduction ratio
RPMI  : R*4 (3);    stage input speed (rpm)
RPMPL : R*4 (3);    planet speed (rpm)
RPMO  : R*4 (3);    stage output speed (rpm)
PWRE  : R*4 (3);    stage power split per planet (hp)
DS    : R*4 (3);    diameter of sun gear (in)
DPLN  : R*4 (3);    diameter of planet gears (in)
DR    : R*4 (3);    diameter of ring gear (in)
FACEE : R*4 (3);    facewidth (in)
GI    : R*4 (3);    durability geometry factor (sun/planet)
GJS   : R*4 (3);    strength geometry factor (sun)
GJPL  : R*4 (3);    strength geometry factor (planet)
NS    : I*4 (3);    number of teeth, sun
NPLN  : I*4 (3);    number of teeth, planet
NR    : I*4 (3);    number of teeth, ring
```

COMMON BLOCK DESPRL (PARALLEL AXIS DESIGN PARAMETERS)

```
PWRFAC: R*4 (2,3); stage power split factor
MGOP  : R*4 (2);   overall reduction ratio
MGP   : R*4 (3,2); stage reduction ratio
```

```
RPMP   : R*4 (6,2); stage pinion and gear speed (rpm)
PWRP   : R*4 (6,2); stage power split per gear (hp)
DP     : R*4 (3,2); diameter of pinion (in)
DG     : R*4 (3,2); diameter of gear (in)
FACEP  : R*4 (3,2); facewidth (in)
GEOMI  : R*4 (3,2); duribility geometry factor
GEOMJG: R*4 (3,2); strength geometry factor (gear)
GEOMJP: R*4 (3,2); strength geometry factor (pinion)
NP     : I*4 (3,2); number of teeth, pinion
NG     : I*4 (3,2); number of teeth, gear
```

COMMON BLOCK RESEPC (EPICYCLIC PARAMETERS, RESULTS)

```
PLVE   : R*4 (3);   pitch line velocity (fpm)
FBYDE  : R*4 (3);   f/d ratio (facewidth/sun diameter)
CDE    : R*4 (3);   center distance (theoretical) (in)
WTE    : R*4 (3);   tangential tooth load (lb)
TLPIE  : R*4 (3);   tooth load per in (lb/in)
UNTLDE: R*4 (3);   unit load (psi)
MFE    : R*4 (3,3); mesh frequency (Hz)
KFCTRE: R*4 (3);   computed k-factor
SIGHE  : R*4 (3);   contact stress (psi)
SIGBE  : R*4 (3);   bending stress (psi)
TORQE  : R*4 (3,3); torgue (k in-lb)
RPME   : R*4 (3,3); gear speeds (rpm)
PDIAME: R*4 (3,3); pitch diameters (in)
WGHTE  : R*4;       gear set weight estimate (lb)
```

```
SPCWTE: R*4;        specific weight (lb/hp)
MTHE  : I*4 (3,3); tooth numbers
ISIZEE: I*4 (3);   length, width, height estimates (in)
```

COMMON BLOCK RESPRL (PARALLEL AXIS PARAMETERS, RESULTS)

```
PLVP  : R*4 (3,2); pitch line velocity (fpm)
FBYDP : R*4 (3,2); f/d ratio (facewidth/pinion diameter)
CDP   : R*4 (3,2); center distance (theoretical) (in)
WTP   : R*4 (6,2); tangential tooth load (lb)
TLPIP : R*4 (6,2); tooth load per inch (lb/in)
UNTLDP: R*4 (6,2); unit load (psi)
MFP   : R*4 (3,2); mesh frequency (Hz)
KFCTRP: R*4 (6,2); computed k-factor
SIGHP : R*4 (3,2); contact stress (psi)
SIGBP : R*4 (6,2); bending stress (psi)
TORQP : R*4 (6,2); torque (k in-lb)
PDIAMP: R*4 (6,2); pitch diameters (in)
SCDMIN: R*4;       minimum source center distance (in)
SCDMAX: R*4;       maximum source center distance (in)
SHP   : R*4;       shaft horsepower, output (hp)
WGHTP : R*4;       gear set weight estimate (lb)
SPCWTP: R*4;       specific weight (lb/hp)
TRQOUT: R*4;       torque, output (k in-lb)
MTHP  : I*4 (6,2); tooth numbers
ISIZEP: I*4 (3);   length, width, height estimates (in)
```

# APPENDIX C

## REGAD SAMPLE RUNS

This appendix contains samples of actual terminal sessions using REGAD. For the sake of brevity, only two complete sessions are included. However, a number of analysis and design runs were made using a full range of options and configurations, and they compared favorably to actual designs. The comparisons are not shown here due to the proprietary nature of the designs used for verification. The first example is an analysis run for a locked train, double reduction gear set with two different inputs. Following it, is the results section from a design run using the identical parameters as the analysis run. The second example is a double reduction epicyclic gear set with the complete analysis session followed by the results section of a design run as before. The analysis and design sessions are identical with one exception. A seed for a random number generator is requested in the design option instead of diameters and facewidths as in the analysis option. For those cases where an infeasible design is generated, a message will alert the user and the program will continue. To obtain a feasible design, or just a different one, rerun the program and

provide a different seed for the random number generator. This method was used on several occasions to obtain the desired results. Once a feasible design is obtained, the user can then use the analysis option to obtain a design that more closely suits his needs.

# I. PARALLEL AXIS GEAR SET
## Analysis Session

```
**********************************************************************
**                                                                  **
**                              REGAD                               **
**                REDUCTION GEAR ANALYSIS AND DESIGN                **
**                                                                  **
**********************************************************************
```

DO YOU DESIRE A PROGRAM DESCRIPTION? (Y OR N):

y

```
**********************************************************************
```

THIS PROGRAM IS CAPABLE OF PERFORMING PRELIMINARY DESIGN OR ANALYSIS OF MULTIREDUCTION, PARALLEL AXIS AND EPICYCLIC REDUCTION GEARS. THE CAPABILITIES AND FEATURES OF THE PROGRAM ARE AS FOLLOWS:

1) MAXIMUM OF THREE REDUCTION STAGES ALLOWED
2) CHOICE OF SINGLE OR DOUBLE HELICALS
3) WEIGHT AND SIZE ESTIMATES PROVIDED
4) FOR PARALLEL AXIS GEARS:
   - ONE OR TWO POWER SOURCES ALLOWED
   - SINGLE OR DUAL POWER PATHS ALLOWED
5) FOR EPICYCLIC GEARS:
   - ONLY ONE POWER SOURCE ALLOWED
   - LIMITED TO 3, 4, OR 5 PLANET GEARS
   - ONLY SIMPLE EPICYCLICS PER REDUCTION STAGE
   - PLANETARY OR STAR ARRANGEMENTS POSSIBLE

THE STANDARDS OF THE AMERICAN GEAR MANUFACTURING ASSOCIATION WERE USED AS A BASIS FOR THIS PROGRAM. THE CONSTANTS

USED IN THE AGMA FORMULATIONS ARE BASED ON THOSE PUBLISHED BY F. A. THOMA, OF DELAVAL TURBINE, FOR MARINE PROPULSION GEARS. AN OPTION IS PROVIDED DURING EXECUTION OF THE PROGRAM TO OBTAIN A LISTING OF THESE CONSTANTS, AND TO CHANGE ANY OF THEM FOR OTHER POSSIBLE APPLICATIONS.

IT SHOULD BE NOTED THAT THE STRESSES LISTED IN THE OUTPUT ARE THOSE COMPUTED FROM THE AGMA FORMULATIONS AND ARE NOT FROM A DETAILED STRESS ANALYSIS.

FOR MORE SPECIFIC INFORMATION, SEE THE USERS MANUAL OR OBTAIN A LISTING OF THE PROGRAM.

**********

DO YOU WISH THE PROGRAM TO CONTINUE INTO THE ANALYSIS AND DESIGN SEGMENTS? (Y OR N):

Y

YOU WILL NOW BE ASKED TO PROVIDE THE PARAMETERS REQUIRED FOR THE ANALYSIS OR DESIGN IN THIS RUN.

** ENTER PROGRAM OPTION CODE (1=DESIGN, 2=ANALYSIS):
?
2

** ENTER ARRANGEMENT CODE (1=PARALLEL AXIS, 2=EPICYCLIC):
?
1

CHOOSE OPERATIONAL PROFILE CODE BELOW:

| OPERATIONAL MODE | SERVICE PROFILE | CODE |
|---|---|---|

```
      FULL POWER          5 PERCENT MAX          1
    MAXIMUM LOAD            CONTINUOUS           2

** ENTER OPERATIONAL PROFILE CODE:
?
1

** ENTER NUMBER OF REDUCTIONS (1, 2, OR 3):
?
2


   CHOOSE DESIRED HELIX TYPE BELOW:
        TYPE      ANGLE     CODE
      SINGLE      15-25       1
      DOUBLE      25-50       2

** ENTER HELIX CODE:
?
2

** ENTER NUMBER OF POWER PATHS (1=SINGLE, 2=DUAL):
?
2

** ENTER NUMBER OF POWER SOURCES (1 OR 2):
?
2

   WILL ANY POWER SOURCE BE A MULTICYLINDER I. C. ENGINE? (Y OR N):
n

** ENTER POWER AND SPEED OF HIGH POWER SOURCE (HP,RPM):
?
21250,6990
```

```
** ENTER POWER AND SPEED OF LOW POWER SOURCE (HP,RPM):
?
21250,5980

** ENTER OUTPUT SHAFT/PROPELLER SPEED (RPM):
?
300


   WHICH DIAMETRAL PITCH WILL YOU SPECIFY?
   (1=TRANSVERSE, 2=NORMAL):
?
1


   WHICH PRESSURE ANGLE WILL YOU SPECIFY?
   (1=TRANSVERSE, 2=NORMAL):
?
2


   THE FOLLOWING PARAMETERS ARE REQUESTED FOR STAGE 1 :

** ENTER HELIX ANGLE (DEGREES):
?
35

** ENTER TRANSVERSE DIAMETRAL PITCH:
?
4.5

** ENTER NORMAL PRESSURE ANGLE (DEGREES):
?
20
```

```
   CHOOSE GEAR HARDNESS RANGE BELOW:
        BHN          CODE
     160 - 200         1
     200 - 240         2
     240 - 300         3
     300 - 360         4
     360 - 400         5
     400 - 640         6

** ENTER HARDNESS CODES FOR PINION AND GEAR (HCPIN,HCGEAR):
?
2,1


   THE FOLLOWING PARAMETERS ARE REQUESTED FOR STAGE 2 :

** ENTER HELIX ANGLE (DEGREES):
?
35

** ENTER TRANSVERSE DIAMETRAL PITCH:
?
3.5

** ENTER NORMAL PRESSURE ANGLE (DEGREES):
?
20


   CHOOSE GEAR HARDNESS RANGE BELOW:
        BHN          CODE
     160 - 200         1
     200 - 240         2
     240 - 300         3
     300 - 360         4
     360 - 400         5
```

```
     400 - 640       6

*** ENTER HARDNESS CODES FOR PINION AND GEAR (HCPIN,HCGEAR):
?
2,1


   TO MAKE CORRECTIONS TO DATA JUST ENTERED, THE PROGRAM MUST BE
   ABORTED AND RE-STARTED.  DO YOU WISH TO ABORT THIS RUN? (Y OR N):
n


   DO YOU DESIRE A LISTING OF THE PRE-PROGRAMMED CONSTANTS USED
IN THE AGMA FORMULATIONS? (Y OR N):
y

    THE FOLLOWING IS A LISTING OF THE PRE-PROGRAMMED CONSTANTS
   USED IN THE AGMA FORMULATIONS WITH APPROPRIATE NOTES ON
   THEIR APPLICATION.  NOTE: THOSE STARTING WITH A 'C' ARE
   DURABILITY CONSTANTS AND THOSE WITH A 'K' ARE STRENGTH
   CONSTANTS.  SERVICE FACTOR APPLIES TO BOTH FORMULATIONS.

   ID     CONST     VALUE(S)    NOTES
    1    SF(1,1)      1.00      SERVICE FACTOR; A1,B1
         SF(1,2)      1.50                      A1,B2
         SF(2,1)      1.50                      A2,B1
         SF(2,2)      1.75                      A2,B2

    2     CV(1)       1.00      DYNAMIC FACTOR; C1
          CV(2)       0.83                      C2
          CV(3)       0.69                      C3

    3       CS        1.00      SIZE FACTOR

    4     CM(1)       1.25      LOAD DISTRIBUTION FACTOR; A1
          CM(2)       1.35                                A2
```

| | | | |
|---|---|---|---|
| 5 | CF | 1.00 | SURFACE CONDITION FACTOR |
| 6 | CO(1) | 1.15 | OVERLOAD FACTOR; A1 |
| | CO(2) | 1.14 | A2 |
| 7 | CP | 2300.0 | ELASTIC PROPERTIES FACTOR |
| 8 | CL(1) | 0.80 | LIFE FACTOR; A1 |
| | CL(2) | 0.68 | A2 |
| 9 | CH | 1.00 | HARDNESS RATIO FACTOR |
| 10 | CT | 1.00 | TEMPERATURE FACTOR |
| 11 | CR(1) | 1.16 | RELIABILITY FACTOR; D1 |
| | CR(2) | 1.19 | D2 |
| | CR(3) | 1.22 | D3 |
| | CR(4) | 1.27 | D4 |
| | CR(5) | 1.31 | D5 |
| | CR(6) | 1.35 | D6 |
| 12 | SAC(1) | 95000. | ALLOWABLE CONTACT STRESS; D1 |
| | SAC(2) | 108000. | D2 |
| | SAC(3) | 125000. | D3 |
| | SAC(4) | 146000. | D4 |
| | SAC(5) | 165000. | D5 |
| | SAC(6) | 182000. | D6 |
| 13 | KV | 0.70 | DYNAMIC FACTOR |
| 14 | KS | 1.00 | SIZE FACTOR |
| 15 | KM | 1.10 | LOAD DISTRIBUTION FACTOR |
| 16 | KO(1) | 1.21 | OVERLOAD FACTOR; E1 |

| | | | | |
|---|---|---|---|---|
| | KO(2) | 1.28 | | E2 |
| 17 | KL(1) | 0.80 | LIFE FACTOR; | A1 |
| | KL(2) | 0.68 | | A2 |
| 18 | KT | 1.00 | TEMPERATURE FACTOR | |
| 19 | KR(1) | 1.16 | RELIABILITY FACTOR; | D1 |
| | KR(2) | 1.18 | | D2 |
| | KR(3) | 1.23 | | D3 |
| | KR(4) | 1.29 | | D4 |
| | KR(5) | 1.31 | | D5 |
| | KR(6) | 1.33 | | D6 |
| 20 | SAT(1) | 32900. | ALLOWABLE MATERIAL STRESS; | D1 |
| | SAT(2) | 38100. | | D2 |
| | SAT(3) | 44500. | | D3 |
| | SAT(4) | 51750. | | D4 |
| | SAT(5) | 54250. | | D5 |
| | SAT(6) | 61000. | | D6 |

DEFINITIONS OF CODED NOTES FROM ABOVE:

A1 NAVAL PROFILE - FULL POWER, 5 PERCENT MAX
A2 OTHER - MAXIMUM LOAD, CONTINUOUS

B1 POWER SOURCE - TURBINE OR MOTOR
B2 POWER SOURCE - MULTICYLINDER I. C. ENGINE

C1 FIRST REDUCTION STAGE
C2 SECOND REDUCTION STAGE
C3 THIRD REDUCTION STAGE

D1 HARDNESS RANGE: 160 - 200 BHN
D2 HARDNESS RANGE: 200 - 240 BHN
D3 HARDNESS RANGE: 240 - 300 BHN
D4 HARDNESS RANGE: 300 - 360 BHN

```
      D5  HARDNESS RANGE: 360 - 400 BHN
      D6  HARDNESS RANGE: 400 - 640 BHN

      E1  SINGLE POWER PATH
      E2  DOUBLE POWER PATH


   DO YOU DESIRE TO CHANGE ANY OF THE ABOVE VALUES? (Y OR N):
Y


   TO CHANGE A CONSTANT ABOVE, ENTER THE ID NUMBER WHEN PROMTED.
   USE ID NUMBER 99 WHEN NO FURTHER CHANGES ARE TO BE MADE.
   NOTE: WHEN ASKED FOR THE NEW VALUE OF THE CONSTANT, ENTERING
   A ZERO WILL CAUSE THE ORIGINAL VALUE TO REMAIN UNCHANGED.
   THIS IS USEFUL WHEN A CONSTANT HAS MULTIPLE VALUES, BUT NOT
   ALL OF THEM ARE TO BE CHANGED.


   ** ENTER THE CONSTANT ID NUMBER (1-20, 99 TO STOP):
?
16

   ** ENTER KO(1):
?
1.14

   ** ENTER KO(2):
?
0


   ** ENTER THE CONSTANT ID NUMBER (1-20, 99 TO STOP):
?
99
```

THE FOLLOWING IS A LISTING OF THE PRE-PROGRAMMED CONSTANTS USED IN THE AGMA FORMULATIONS WITH APPROPRIATE NOTES ON THEIR APPLICATION. NOTE: THOSE STARTING WITH A 'C' ARE DURABILITY CONSTANTS AND THOSE WITH A 'K' ARE STRENGTH CONSTANTS. SERVICE FACTOR APPLIES TO BOTH FORMULATIONS.

| ID | CONST | VALUE(S) | NOTES |
|---|---|---|---|
| 1 | SF(1,1) | 1.00 | SERVICE FACTOR; A1,B1 |
| | SF(1,2) | 1.50 | A1,B2 |
| | SF(2,1) | 1.50 | A2,B1 |
| | SF(2,2) | 1.75 | A2,B2 |
| 2 | CV(1) | 1.00 | DYNAMIC FACTOR; C1 |
| | CV(2) | 0.83 | C2 |
| | CV(3) | 0.69 | C3 |
| 3 | CS | 1.00 | SIZE FACTOR |
| 4 | CM(1) | 1.25 | LOAD DISTRIBUTION FACTOR; A1 |
| | CM(2) | 1.35 | A2 |
| 5 | CF | 1.00 | SURFACE CONDITION FACTOR |
| 6 | CO(1) | 1.15 | OVERLOAD FACTOR; A1 |
| | CO(2) | 1.14 | A2 |
| 7 | CP | 2300.0 | ELASTIC PROPERTIES FACTOR |
| 8 | CL(1) | 0.80 | LIFE FACTOR; A1 |
| | CL(2) | 0.68 | A2 |
| 9 | CH | 1.00 | HARDNESS RATIO FACTOR |
| 10 | CT | 1.00 | TEMPERATURE FACTOR |
| 11 | CR(1) | 1.16 | RELIABILITY FACTOR; D1 |

| | | | | |
|---|---|---|---|---|
| | CR(2) | 1.19 | | D2 |
| | CR(3) | 1.22 | | D3 |
| | CR(4) | 1.27 | | D4 |
| | CR(5) | 1.31 | | D5 |
| | CR(6) | 1.35 | | D6 |
| 12 | SAC(1) | 95000. | ALLOWABLE CONTACT STRESS; | D1 |
| | SAC(2) | 108000. | | D2 |
| | SAC(3) | 125000. | | D3 |
| | SAC(4) | 146000. | | D4 |
| | SAC(5) | 165000. | | D5 |
| | SAC(6) | 182000. | | D6 |
| 13 | KV | 0.70 | DYNAMIC FACTOR | |
| 14 | KS | 1.00 | SIZE FACTOR | |
| 15 | KM | 1.10 | LOAD DISTRIBUTION FACTOR | |
| 16 | KO(1) | 1.14 | OVERLOAD FACTOR; | E1 |
| | KO(2) | 1.28 | | E2 |
| 17 | KL(1) | 0.80 | LIFE FACTOR; | A1 |
| | KL(2) | 0.68 | | A2 |
| 18 | KT | 1.00 | TEMPERATURE FACTOR | |
| 19 | KR(1) | 1.16 | RELIABILITY FACTOR; | D1 |
| | KR(2) | 1.18 | | D2 |
| | KR(3) | 1.23 | | D3 |
| | KR(4) | 1.29 | | D4 |
| | KR(5) | 1.31 | | D5 |
| | KR(6) | 1.33 | | D6 |
| 20 | SAT(1) | 32900. | ALLOWABLE MATERIAL STRESS; | D1 |
| | SAT(2) | 38100. | | D2 |

```
     SAT(3)     44500.                                        D3
     SAT(4)     51750.                                        D4
     SAT(5)     54250.                                        D5
     SAT(6)     61000.                                        D6

 DEFINITIONS OF CODED NOTES FROM ABOVE:
  A1  NAVAL PROFILE - FULL POWER, 5 PERCENT MAX
  A2  OTHER - MAXIMUM LOAD, CONTINUOUS

  B1  POWER SOURCE - TURBINE OR MOTOR
  B2  POWER SOURCE - MULTICYLINDER I. C. ENGINE

  C1  FIRST REDUCTION STAGE
  C2  SECOND REDUCTION STAGE
  C3  THIRD REDUCTION STAGE

  D1  HARDNESS RANGE: 160 - 200 BHN
  D2  HARDNESS RANGE: 200 - 240 BHN
  D3  HARDNESS RANGE: 240 - 300 BHN
  D4  HARDNESS RANGE: 300 - 360 BHN
  D5  HARDNESS RANGE: 360 - 400 BHN
  D6  HARDNESS RANGE: 400 - 640 BHN

  E1  SINGLE POWER PATH
  E2  DOUBLE POWER PATH


 THE INFORMATION REQUESTED BELOW IS FOR REDUCTION STAGE 1
 IN POWER TRAIN 1.

 ENTER DIAMETERS OF PINION AND GEAR, INCHES (DP,DG):
?
9.31,29.35
```

```
** ENTER FACEWIDTH OF GEAR PAIR, INCHES:
?
16.62

   THE INFORMATION REQUESTED BELOW IS FOR REDUCTION STAGE 2
   IN POWER TRAIN 1.

** ENTER DIAMETERS OF PINION AND GEAR, INCHES (DP,DG):
?
14.24,105.25

** ENTER FACEWIDTH OF GEAR PAIR, INCHES:
?
25.97

   THE INFORMATION REQUESTED BELOW IS FOR REDUCTION STAGE 1
   IN POWER TRAIN 2.

** ENTER DIAMETERS OF PINION AND GEAR, INCHES (DP,DG):
?
10.01,26.98

** ENTER FACEWIDTH OF GEAR PAIR, INCHES:
?
18.02

   THE INFORMATION REQUESTED BELOW IS FOR REDUCTION STAGE 2
   IN POWER TRAIN 2.

** ENTER ONLY DIAMETER OF PINION, INCHES (DP):
?
14.24
```

POWER SOURCE 1: TURBINE OR MOTOR
INPUT POWER (HP): 21250. INPUT SPEED (RPM): 6990.

ARRANGEMENT: PARALLEL AXIS, 2 INPUT(S), 2 POWER PATH(S), 2 REDUCTION(S)
OUTPUT POWER (HP): 42500.0 OUTPUT SPEED (RPM): 300.
RATIO: 23.301 OUTPUT TORQUE (K IN-LB): 8925.0

SOURCE CENTER DISTANCE (IN): MIN= 38.8 MAX= 49.4

SIZING ESTIMATES FOR THE ENTIRE REDUCTION SET:
WEIGHT (LB): 93200. SPECIFIC WEIGHT (LB/HP): 2.19
LENGTH (IN): 99 WIDTH (IN): 135 HEIGHT (IN): 144

| | | REDUCTION 1 | | REDUCTION 2 | |
|---|---|---|---|---|---|
| | | PINION | GEAR | PINION | GEAR |
| POWER SPLIT | HP | 21250. | 10625. | 10625. | 21250. |
| SPEED | RPM | 6990. | 2217. | 2217. | 300. |
| NUMBER OF TEETH | | 42 | 132 | 50 | 368 |
| NORMAL DIAMETRAL PITCH | | 5.493 | | 4.273 | |
| TRANS. DIAMETRAL PITCH | | 4.500 | | 3.500 | |
| NORMAL PRESSURE ANGLE | | 20.0 | | 20.0 | |
| TRANS. PRESSURE ANGLE | | 24.0 | | 24.0 | |
| HELIX ANGLE | | 35.0 | | 35.0 | |
| GEAR RATIO | | 3.153 | | 7.391 | |
| PITCH DIAMETER | IN | 9.31 | 29.35 | 14.24 | 105.25 |
| EFFECTIVE FACEWIDTH | IN | 16.62 | | 25.97 | |
| F/DP | | 1.79 | | 1.82 | |
| CENTER DISTANCE | IN | 19.33 | | 59.74 | |
| PITCHLINE VELOCITY | FPM | 17037. | | 8266. | |
| TANGENTIAL LOAD | LB | 41160. | 20580. | 42417. | 84835. |
| TOOTH LOAD/IN | LB/IN | 2477. | 1238. | 1633. | 3267. |
| UNIT LOAD | PSI | 13605. | 6802. | 6979. | 13957. |

| | | | | |
|---|---|---|---|---|
| MESH FREQRENCY HZ | 4893. | | 1848. | |
| K FACTOR (COMPUTED) | 350. | 175. | 130. | 260. |
| CONTACT STRESS PSI | 89094. | | 59079. | |
| BENDING STRESS PSI | 37381. | 17155. | 18416. | 33846. |
| TORQUE K IN-LB | 191.6 | 302.0 | 302.0 | 4464.4 |
| HARDNESS RANGE BHN | 200-240 | 160-200 | 200-240 | 160-200 |

POWER SOURCE 2: TURBINE OR MOTOR
INPUT POWER (HP): 21250. INPUT SPEED (RPM): 5980.

ARRANGEMENT: PARALLEL AXIS, 2 INPUT(S), 2 POWER PATH(S), 2 REDUCTION(S)
OUTPUT POWER (HP): 42500.0 OUTPUT SPEED (RPM): 300.
RATIO: 19.921 OUTPUT TORQUE (K IN-LB): 8925.0

SOURCE CENTER DISTANCE (IN): MIN= 38.8 MAX= 49.4

SIZING ESTIMATES FOR THE ENTIRE REDUCTION SET:
WEIGHT (LB): 93200. SPECIFIC WEIGHT (LB/HP): 2.19
LENGTH (IN): 99 WIDTH (IN): 135 HEIGHT (IN): 144

| | | REDUCTION 1 | | REDUCTION 2 | |
|---|---|---|---|---|---|
| | | PINION | GEAR | PINION | GEAR |
| POWER SPLIT | HP | 21250. | 10625. | 10625. | 21250. |
| SPEED | RPM | 5980. | 2219. | 2219. | 300. |
| NUMBER OF TEETH | | 45 | 121 | 50 | 368 |
| NORMAL DIAMETRAL PITCH | | 5.493 | | 4.273 | |
| TRANS. DIAMETRAL PITCH | | 4.500 | | 3.500 | |
| NORMAL PRESSURE ANGLE | | 20.0 | | 20.0 | |
| TRANS. PRESSURE ANGLE | | 24.0 | | 24.0 | |
| HELIX ANGLE | | 35.0 | | 35.0 | |
| GEAR RATIO | | 2.695 | | 7.391 | |
| PITCH DIAMETER | IN | 10.01 | 26.98 | 14.24 | 105.25 |

| | | | | |
|---|---|---|---|---|
| EFFECTIVE FACEWIDTH IN | 18.02 | | 25.97 | |
| F/DP | 1.80 | | 1.82 | |
| CENTER DISTANCE IN | 18.49 | | 59.74 | |
| PITCHLINE VELOCITY FPM | 15671. | | 8271. | |
| TANGENTIAL LOAD LB | 44747. | 22374. | 42390. | 84781. |
| TOOTH LOAD/IN LB/IN | 2483. | 1242. | 1632. | 3265. |
| UNIT LOAD PSI | 13641. | 6821. | 6974. | 13949. |
| MESH FREQRENCY HZ | 4485. | | 1849. | |
| K FACTOR (COMPUTED) | 340. | 170. | 130. | 260. |
| CONTACT STRESS PSI | 87718. | | 59060. | |
| BENDING STRESS PSI | 37061. | 17230. | 18404. | 33824. |
| TORQUE K IN-LB | 224.0 | 301.8 | 301.8 | 4461.6 |
| HARDNESS RANGE BHN | 200-240 | 160-200 | 200-240 | 160-200 |

**********

## Results from Design Session

```
 ** ENTER SEED FOR RANDOM NUMBER GENERATOR (X.XX):
?
0.76

**********************************************************************

 POWER SOURCE 1:  TURBINE OR MOTOR
     INPUT POWER (HP):  21250.     INPUT SPEED (RPM):  6990.

 ARRANGEMENT: PARALLEL AXIS, 2 INPUT(S), 2 POWER PATH(S), 2 REDUCTION(S)
     OUTPUT POWER (HP):  42500.0   OUTPUT SPEED (RPM):  300.
     RATIO: 23.300                 OUTPUT TORQUE (K IN-LB):   8925.0

 SOURCE CENTER DISTANCE (IN): MIN=  57.7   MAX=  57.7

 SIZING ESTIMATES FOR THE ENTIRE REDUCTION SET:
     WEIGHT (LB): 125000.      SPECIFIC WEIGHT (LB/HP):   2.94
     LENGTH (IN): 143   WIDTH (IN): 165   HEIGHT (IN): 177
```

| | | REDUCTION 1 | | REDUCTION 2 | |
|---|---|---|---|---|---|
| | | PINION | GEAR | PINION | GEAR |
| POWER SPLIT | HP | 21250. | 10625. | 10625. | 21250. |
| SPEED | RPM | 6990. | 2411. | 2411. | 300. |
| NUMBER OF TEETH | | 72 | 209 | 56 | 452 |
| NORMAL DIAMETRAL PITCH | | 5.493 | | 4.273 | |
| TRANS. DIAMETRAL PITCH | | 4.500 | | 3.500 | |
| NORMAL PRESSURE ANGLE | | 20.0 | | 20.0 | |
| TRANS. PRESSURE ANGLE | | 24.0 | | 24.0 | |
| HELIX ANGLE | | 35.0 | | 35.0 | |
| GEAR RATIO | | 2.899 | | 8.037 | |
| PITCH DIAMETER | IN | 15.99 | 46.35 | 16.06 | 129.07 |
| EFFECTIVE FACEWIDTH | IN | 30.91 | | 32.19 | |

| | | | | | | | |
|---|---|---|---|---|---|---|---|
| F/DP | | 1.93 | | | 2.00 | | |
| CENTER DISTANCE | IN | 31.17 | | | 72.57 | | |
| PITCHLINE VELOCITY | FPM | 29258. | | | 10137. | | |
| TANGENTIAL LOAD | LB | 23968. | 11984. | | 34587. | 69174. | |
| TOOTH LOAD/IN | LB/IN | 775. | 388. | | 1074. | 2149. | |
| UNIT LOAD | PSI | 4259. | 2130. | | 4591. | 9182. | |
| MESH FREQRENCY | HZ | 8388. | | | 2250. | | |
| K FACTOR (COMPUTED) | | 65. | 33. | | 75. | 150. | |
| CONTACT STRESS | PSI | 37970. | | | 44786. | | |
| BENDING STRESS | PSI | 10804. | 5176. | | 11900. | 22092. | |
| TORQUE | K IN-LB | 191.6 | 277.7 | | 277.7 | 4464.3 | |
| HARDNESS RANGE | BHN | 200-240 | 160-200 | | 200-240 | 160-200 | |

**********

POWER SOURCE 2: TURBINE OR MOTOR
INPUT POWER (HP): 21250. INPUT SPEED (RPM): 5980.

ARRANGEMENT: PARALLEL AXIS, 2 INPUT(S), 2 POWER PATH(S), 2 REDUCTION(S)
OUTPUT POWER (HP): 42500.0 OUTPUT SPEED (RPM): 300.
RATIO: 19.933 OUTPUT TORQUE (K IN-LB): 8925.0

SOURCE CENTER DISTANCE (IN): MIN= 57.7 MAX= 57.7

SIZING ESTIMATES FOR THE ENTIRE REDUCTION SET:
WEIGHT (LB): 125000. SPECIFIC WEIGHT (LB/HP): 2.94
LENGTH (IN): 143 WIDTH (IN): 165 HEIGHT (IN): 177

| | | REDUCTION 1 | | REDUCTION 2 | |
|---|---|---|---|---|---|
| | | PINION | GEAR | PINION | GEAR |
| POWER SPLIT | HP | 21250. | 10625. | 10625. | 21250. |
| SPEED | RPM | 5980. | 1851. | 1851. | 300. |
| NUMBER OF TEETH | | 76 | 247 | 73 | 452 |
| NORMAL DIAMETRAL PITCH | | 5.493 | | 4.273 | |

| | | | | |
|---|---|---|---|---|
| TRANS. DIAMETRAL PITCH | 4.500 | | 3.500 | |
| NORMAL PRESSURE ANGLE | 20.0 | | 20.0 | |
| TRANS. PRESSURE ANGLE | 24.0 | | 24.0 | |
| HELIX ANGLE | 35.0 | | 35.0 | |
| GEAR RATIO | 3.231 | | 6.169 | |
| PITCH DIAMETER IN | 16.97 | 54.82 | 20.92 | 129.07 |
| EFFECTIVE FACEWIDTH IN | 27.14 | | 27.14 | |
| F/DP | 1.60 | | 1.30 | |
| CENTER DISTANCE IN | 35.89 | | 75.00 | |
| PITCHLINE VELOCITY FPM | 26562. | | 10137. | |
| TANGENTIAL LOAD LB | 26400. | 13200. | 34587. | 69174. |
| TOOTH LOAD/IN LB/IN | 973. | 486. | 1274. | 2548. |
| UNIT LOAD PSI | 5343. | 2672. | 5444. | 10889. |
| MESH FREQRENCY HZ | 7575. | | 2252. | |
| K FACTOR (COMPUTED) | 75. | 38. | 71. | 142. |
| CONTACT STRESS PSI | 40667. | | 43269. | |
| BENDING STRESS PSI | 13453. | 6452. | 13701. | 25995. |
| TORQUE K IN-LB | 224.0 | 361.8 | 361.8 | 4464.3 |
| HARDNESS RANGE BHN | 200-240 | 160-200 | 200-240 | 160-200 |

## II. EPICYCLIC GEAR SET
## Analysis Session

```
**********************************************************
**                                                      **
**                        REGAD                         **
**          REDUCTION GEAR ANALYSIS AND DESIGN          **
**                                                      **
**********************************************************

   DO YOU DESIRE A PROGRAM DESCRIPTION? (Y OR N):
n

   YOU WILL NOW BE ASKED TO PROVIDE THE PARAMETERS REQUIRED
FOR THE ANALYSIS OR DESIGN IN THIS RUN.

** ENTER PROGRAM OPTION CODE (1=DESIGN, 2=ANALYSIS):
?
2

** ENTER ARRANGEMENT CODE (1=PARALLEL AXIS, 2=EPICYCLIC):
?
2

   CHOOSE OPERATIONAL PROFILE CODE BELOW:
   OPERATIONAL MODE     SERVICE PROFILE     CODE
      FULL POWER         5 PERCENT MAX        1
    MAXIMUM LOAD           CONTINUOUS         2
```

```
** ENTER OPERATIONAL PROFILE CODE:
?
1

** ENTER NUMBER OF REDUCTIONS (1, 2, OR 3):
?
2


   CHOOSE DESIRED HELIX TYPE BELOW:
        TYPE      ANGLE     CODE
       SINGLE     15-25       1
       DOUBLE     25-50       2

** ENTER HELIX CODE:
?
2

   WILL ANY POWER SOURCE BE A MULTICYLINDER I. C. ENGINE? (Y OR N):
n

** ENTER POWER AND SPEED OF THE POWER SOURCE (HP,RPM):
?
8250,3600

** ENTER OUTPUT SHAFT/PROPELLER SPEED (RPM):
?
155


   WHICH DIAMETRAL PITCH WILL YOU SPECIFY?
   (1=TRANSVERSE, 2=NORMAL):
?
2
```

```
   WHICH PRESSURE ANGLE WILL YOU SPECIFY?
   (1=TRANSVERSE, 2=NORMAL):
?
2


   THE FOLLOWING PARAMETERS ARE REQUESTED FOR STAGE 1 :

** ENTER HELIX ANGLE (DEGREES):
?
25

** ENTER NORMAL DIAMETRAL PITCH:
?
8

** ENTER NORMAL PRESSURE ANGLE (DEGREES):
?
20

** ENTER EPICYCLIC CODE (1=PLANETARY, 2=STAR):
?
1

** ENTER NUMBER OF PLANET GEARS (3 TO 5):
?
4


   CHOOSE GEAR HARDNESS RANGE BELOW:
        BHN          CODE
     160 - 200         1
     200 - 240         2
     240 - 300         3
     300 - 360         4
     360 - 400         5
```

```
     400 - 640        6

** ENTER HARDNESS CODES FOR SUN/PLANETS AND RING (HCSUN,HCRING):
?
4,2

   THE FOLLOWING PARAMETERS ARE REQUESTED FOR STAGE 2 :

** ENTER HELIX ANGLE (DEGREES):
?
25

** ENTER NORMAL DIAMETRAL PITCH:
?
6

** ENTER NORMAL PRESSURE ANGLE (DEGREES):
?
20

** ENTER EPICYCLIC CODE (1=PLANETARY, 2=STAR):
?
1

** ENTER NUMBER OF PLANET GEARS (3 TO 5):
?
5

   CHOOSE GEAR HARDNESS RANGE BELOW:
        BHN          CODE
     160 - 200         1
     200 - 240         2
     240 - 300         3
     300 - 360         4
```

```
      360 - 400        5
      400 - 640        6

** ENTER HARDNESS CODES FOR SUN/PLANETS AND RING (HCSUN,HCRING):
?
4,2


   TO MAKE CORRECTIONS TO DATA JUST ENTERED, THE PROGRAM MUST BE
   ABORTED AND RE-STARTED.  DO YOU WISH TO ABORT THIS RUN? (Y OR N):
n


   DO YOU DESIRE A LISTING OF THE PRE-PROGRAMMED CONSTANTS USED
IN THE AGMA FORMULATIONS? (Y OR N):
n


   THE INFORMATION REQUESTED BELOW IS FOR REDUCTION STAGE 1.

** ENTER DIAMETERS, IN INCHES, OF SUN, PLANET, AND RING GEARS
   (DS, DPLN, DR):
?
12.55,18.76,50.34

** ENTER FACEWIDTH OF GEARS, IN INCHES:
?
19.13


   THE INFORMATION REQUESTED BELOW IS FOR REDUCTION STAGE 2.

** ENTER DIAMETERS, IN INCHES, OF SUN, PLANET, AND RING GEARS
   (DS, DPLN, DR):
?
22.99,30.16,83.67
```

*** ENTER FACEWIDTH OF GEARS, IN INCHES:
?
27.57

**********

POWER SOURCE: TURBINE OR MOTOR
INPUT POWER (HP): 8250. INPUT SPEED (RPM): 3600.

ARRANGEMENT: EPICYCLIC, 2 REDUCTION(S)
OUTPUT POWER (HP): 8250. OUTPUT SPEED (RPM): 155.
RATIO: 23.226 OUTPUT TORQUE (K IN-LB): 3356.5

SIZING ESTIMATES FOR THE ENTIRE REDUCTION SET:
WEIGHT (LB): 65400. SPECIFIC WEIGHT (LB/HP): 7.93
LENGTH (IN): 133 WIDTH (IN): 109 HEIGHT (IN): 100



**********

REDUCTION 1

| | SUN | PLANETS | RING-CAGE |
|---|---|---|---|
| GEAR ARRANGEMENT | | PLANETARY | |
| NUMBER OF PLANETS | | 4 | |
| POWER SPLIT HP | 8250. | 2063. | 8250. |
| SPEED RPM | 3600. | 1928. | 718. |
| NUMBER OF TEETH | 91 | 136 | 365 |
| NORMAL DIAMETRAL PITCH | | 8.000 | |
| TRANS. DIAMETRAL PITCH | | 7.250 | |
| NORMAL PRESSURE ANGLE | | 20.0 | |
| TRANS. PRESSURE ANGLE | | 21.9 | |

| | | | |
|---|---|---|---|
| HELIX ANGLE | | 25.0 | |
| GEAR RATIO | | 5.011 | |
| PITCH DIAMETER IN | 12.55 | 18.76 | 50.34 |
| EFFECTIVE FACEWIDTH IN | | 19.13 | |
| F/DP | | 1.52 | |
| CENTER DISTANCE IN | | 15.65 | |
| PITCHLINE VELOCITY FPM | | 11828. | |
| TANGENTIAL LOAD LB | | 23017. | |
| TOOTH LOAD/IN LB/IN | | 1203. | |
| UNIT LOAD PSI | | 9626. | |
| MESH FREQRENCY HZ | 11526. | 1928. | 2874. |
| K FACTOR (COMPUTED) | | 160. | |
| CONTACT STRESS PSI | | 62354. | |
| BENDING STRESS PSI | | 26284. | |
| TORQUE K IN-LB | 144.4 | 215.9 | 723.5 |
| HARDNESS RANGE BHN | 300 - 360 | 300 - 360 | 200 - 240 |



REDUCTION 2

| | SUN | PLANETS | RING-CAGE |
|---|---|---|---|
| GEAR ARRANGEMENT | | PLANETARY | |
| NUMBER OF PLANETS | | 5 | |
| POWER SPLIT HP | 8250. | 1650. | 8250. |
| SPEED RPM | 718. | 430. | 155. |
| NUMBER OF TEETH | 125 | 164 | 455 |
| NORMAL DIAMETRAL PITCH | | 6.000 | |
| TRANS. DIAMETRAL PITCH | | 5.438 | |
| NORMAL PRESSURE ANGLE | | 20.0 | |
| TRANS. PRESSURE ANGLE | | 21.9 | |
| HELIX ANGLE | | 25.0 | |
| GEAR RATIO | | 4.639 | |
| PITCH DIAMETER IN | 22.99 | 30.16 | 83.67 |
| EFFECTIVE FACEWIDTH IN | | 27.57 | |

| | | | | |
|---|---|---|---|---|
| F/DP | | 1.20 | | |
| CENTER DISTANCE IN | | 26.57 | | |
| PITCHLINE VELOCITY FPM | | 4324. | | |
| TANGENTIAL LOAD LB | | 62964. | | |
| TOOTH LOAD/IN LB/IN | | 2284. | | |
| UNIT LOAD PSI | | 13703. | | |
| MESH FREQRENCY HZ | 2818. | 430. | 774. | |
| K FACTOR (COMPUTED) | | 175. | | |
| CONTACT STRESS PSI | | 64864. | | |
| BENDING STRESS PSI | | 36504. | | |
| TORQUE K IN-LB | 723.8 | 949.5 | 3356.5 | |
| HARDNESS RANGE BHN | 300 - 360 | 300 - 360 | 200 - 240 | |

## Results from Design Session

```
 ** ENTER SEED FOR RANDOM NUMBER GENERATOR (X.XX):
?
0.076
```

**********

POWER SOURCE: TURBINE OR MOTOR
INPUT POWER (HP): 8250. INPUT SPEED (RPM): 3600.

ARRANGEMENT: EPICYCLIC, 2 REDUCTION(S)
OUTPUT POWER (HP): 8250. OUTPUT SPEED (RPM): 155.
RATIO: 23.093 OUTPUT TORQUE (K IN-LB): 3334.1

SIZING ESTIMATES FOR THE ENTIRE REDUCTION SET:
WEIGHT (LB): 66300. SPECIFIC WEIGHT (LB/HP): 8.04
LENGTH (IN): 154 WIDTH (IN): 92 HEIGHT (IN): 85



**********

REDUCTION 1

| | SUN | PLANETS | RING-CAGE |
|---|---|---|---|
| GEAR ARRANGEMENT | | PLANETARY | |
| NUMBER OF PLANETS | | 4 | |
| POWER SPLIT HP | 8250. | 2063. | 8250. |
| SPEED RPM | 3600. | 1786. | 684. |
| NUMBER OF TEETH | 98 | 160 | 418 |
| NORMAL DIAMETRAL PITCH | | 8.000 | |
| TRANS. DIAMETRAL PITCH | | 7.250 | |
| NORMAL PRESSURE ANGLE | | 20.0 | |

| | | | |
|---|---|---|---|
| TRANS. PRESSURE ANGLE | | 21.9 | |
| HELIX ANGLE | | 25.0 | |
| GEAR RATIO | | 5.265 | |
| PITCH DIAMETER IN | 13.54 | 22.07 | 57.65 |
| EFFECTIVE FACEWIDTH IN | | 14.52 | |
| F/DP | | 1.07 | |
| CENTER DISTANCE IN | | 17.80 | |
| PITCHLINE VELOCITY FPM | | 12762. | |
| TANGENTIAL LOAD LB | | 21333. | |
| TOOTH LOAD/IN LB/IN | | 1470. | |
| UNIT LOAD PSI | | 11756. | |
| MESH FREQRENCY HZ | 11665. | 1786. | 2735. |
| K FACTOR (COMPUTED) | | 175. | |
| CONTACT STRESS PSI | | 59881. | |
| BENDING STRESS PSI | | 32049. | |
| TORQUE K IN-LB | 144.4 | 235.4 | 760.2 |
| HARDNESS RANGE BHN | 300 - 360 | 300 - 360 | 200 - 240 |



REDUCTION 2

| | SUN | PLANETS | RING-CAGE |
|---|---|---|---|
| GEAR ARRANGEMENT | | PLANETARY | |
| NUMBER OF PLANETS | | 5 | |
| POWER SPLIT HP | 8250. | 1650. | 8250. |
| SPEED RPM | 684. | 442. | 156. |
| NUMBER OF TEETH | 114 | 136 | 386 |
| NORMAL DIAMETRAL PITCH | | 6.000 | |
| TRANS. DIAMETRAL PITCH | | 5.438 | |
| NORMAL PRESSURE ANGLE | | 20.0 | |
| TRANS. PRESSURE ANGLE | | 21.9 | |
| HELIX ANGLE | | 25.0 | |
| GEAR RATIO | | 4.386 | |
| PITCH DIAMETER IN | 21.03 | 25.01 | 70.98 |

| | | | |
|---|---|---|---|
| EFFECTIVE FACEWIDTH IN | | 39.42 | |
| F/DP | | 1.87 | |
| CENTER DISTANCE IN | | 23.02 | |
| PITCHLINE VELOCITY FPM | | 3764. | |
| TANGENTIAL LOAD LB | | 72331. | |
| TOOTH LOAD/IN LB/IN | | 1835. | |
| UNIT LOAD PSI | | 11009. | |
| MESH FREQRENCY HZ | 2639. | 442. | 779. |
| K FACTOR (COMPUTED) | | 161. | |
| CONTACT STRESS PSI | | 53704. | |
| BENDING STRESS PSI | | 30069. | |
| TORQUE K IN-LB | 760.5 | 904.5 | 3334.1 |
| HARDNESS RANGE BHN | 300 - 360 | 300 - 360 | 200 - 240 |

# APPENDIX D

## PROGRAM LISTING

### Module One

```
C*********************************************************************1MOD0010
C*                              REGAD                                *1MOD0020
C*                  REDUCTION GEAR ANALYSIS AND DESIGN               *1MOD0030
C*********************************************************************1MOD0040
C     CODED BY:  LT J.L. PAQUETTE, USN            JAN 1982            1MOD0050
C                NAVAL POSTGRADUATE SCHOOL  MONTEREY, CA 93940        1MOD0060
C                                                                     1MOD0070
C        THIS IS THE MAIN PROGRAM FOR THE  REGAD  PACKAGE OF SUBROUTINES1MOD0080
C     FOR THE PRELIMINARY DESIGN OR ANALYSIS OF MULTIREDUCTION, PARALLEL1MOD0090
C     AXIS AND EPICYCLIC GEARING FOR MARINE APPLICATIONS.  A BRIEF DE- 1MOD0100
C     SCRIPTION AND LISTING OF CAPABILITIES CAN BE OBTAINED AS AN OPTION1MOD0110
C     DURING THE EXECUTION OF THE PROGRAM.  THIS PACKAGE HAS BEEN DE-  1MOD0120
C     SIGNED IN MODULAR FORM FOR EASE OF MAINTENANCE AND MODIFICATION. 1MOD0130
C     WITH THE EXCEPTION OF FREE FORMATTED INPUT, EVERY ATTEMPT WAS MADE1MOD0140
C     TO ENSURE PORTABILITY BY USING ANSI FORTRAN (FORTRAN IV).        1MOD0150
C                                                                     1MOD0160
      REAL MGOP,MGP,MGOE,MGE,MFP,MFE,KFCTRP,KFCTRE                    1MOD0170
C                                                                     1MOD0180
C        SEVEN COMMON BLOCKS ARE USED FOR DATA TRANSFER WITHIN THE PRO-1MOD0190
C     GRAM.  TWO CONTAIN THE PRE-PROGRAMMED AGMA CONSTANTS.  A LISTING 1MOD0200
C     OF THESE CONSTANTS AND THEIR VALUES CAN BE OBTAINED AND SELECTIVE-1MOD0210
C     LY CHANGED AS AN OPTION DURING THE EXECUTION OF THE PROGRAM.     1MOD0220
C                                                                     1MOD0230
```

```
      COMMON /AGMAB/ SFB(2,2),AKV,AKS,AKM,AKO(2),SAT(6),AKL(2),AKR(6),AK1MOD0240
     1T                                                                 1MOD0250
C                                                                       1MOD0260
C *** COMMON BLOCK AGMAB  (FOR STRENGTH RATING)                         1MOD0270
C     AKL   : R*4 ARRAY (2);   LIFE FACTOR                              1MOD0280
C     AKM   : R*4;             LOAD DISTRIBUTION FACTOR                 1MOD0290
C     AKO   : R*4 ARRAY (2);   OVERLOAD FACTOR                          1MOD0300
C     AKR   : R*4 ARRAY (6);   RELIABILITY FACTOR                       1MOD0310
C     AKS   : R*4;             SIZE FACTOR                              1MOD0320
C     AKT   : R*4;             TEMPERATURE FACTOR                       1MOD0330
C     AKV   : R*4;             DYNAMIC FACTOR                           1MOD0340
C     SAT   : R*4 ARRAY (6);   ALLOWABLE BENDING STRESS NUMBER          1MOD0350
C     SFB   : R*4 ARRAY (2,2); SERVICE FACTOR                           1MOD0360
C                                                                       1MOD0370
      COMMON /AGMAH/ SFH(2,2),CV(3),CS,CM(2),CF,CO(2),SAC(6),CP,CL(2),CH1MOD0380
     1,CT,CR(6)                                                         1MOD0390
C                                                                       1MOD0400
C *** COMMON BLOCK AGMAH  (FOR DURABILITY RATING)                       1MOD0410
C     CF    : R*4;             SURFACE FINISH FACTOR                    1MOD0420
C     CH    : R*4;             HARDNESS FACTOR                          1MOD0430
C     CL    : R*4 ARRAY (2);   LIFE FACTOR                             1MOD0440
C     CM    : R*4 ARRAY (2);   LOAD DISTRIBUTION FACTOR                1MOD0450
C     CO    : R*4 ARRAY (2);   OVERLOAD FACTOR                         1MOD0460
C     CP    : R*4;             ELASTIC PROPERTIES FACTOR               1MOD0470
C     CR    : R*4 ARRAY (6);   RELIABILITY FACTOR                      1MOD0480
C     CS    : R*4;             SIZE FACTOR                             1MOD0490
C     CT    : R*4;             TEMPERATURE FACTOR                      1MOD0500
C     CV    : R*4 ARRAY (3);   DYNAMIC FACTOR                          1MOD0510
C     SAC   : R*4 ARRAY (6);   ALLOWABLE CONTACT STRESS NUMBER         1MOD0520
C     SFH   : R*4 ARRAY (2,2); SERVICE FACTOR                          1MOD0530
C                                                                       1MOD0540
      COMMON /DESDAT/ PWRIN(2),RPMIN(2),RPMOUT,DHELIX(3),HELIX(3),PD(3),1MOD0550
     1PND(3),DPHI(3),PHI(3),DPHIN(3),PHIN(3),NDIFP,IARR,IEPIC(3),IHARD(31MOD0560
     2,2),IOPRO,NPWRIN,IPWRSR(2),NRED,NPATH,NPLNT(3),NHELX              1MOD0570
C                                                                       1MOD0580
C *** COMMON BLOCK DESDAT  (DESIGN PARAMETERS, INPUT)                   1MOD0590
```

```
C     DHELIX: R*4 ARRAY (3);   HELIX ANGLE (DEG)                          1MOD0600
C     DPHI  : R*4 ARRAY (3);   TRANSVERSE PRESSURE ANGLE (DEG)            1MOD0610
C     DPHIN : R*4 ARRAY (3);   NORMAL PRESSURE ANGLE (DEG)                1MOD0620
C     HELIX : R*4 ARRAY (3);   HELIX ANGLE (RAD)                          1MOD0630
C     IARR  : I*4;             ARRANGEMENT CODE (1=PARALLEL AXIS, 2=EPI-1MOD0640
C                              CYCLIC)                                    1MOD0650
C     NDIFP : I*4;             NUMBER OF DIFFERENT POWER SOURCES          1MOD0660
C     IEPIC : I*4 ARRAY (3);   EPICYCLIC CODE (1=PLANETARY, 2=STAR)       1MOD0670
C     IHARD : I*4 ARRAY (3,2); HARDNESS RANGE CODE (1-6, SEE SUBR. AGMA) 1MOD0680
C     IOPRO : I*4;             OPERATIONAL PROFILE CODE (1=NAVAL PROFILE1MOD0690
C                              FULL POWER 5% MAX; 2=OTHER, MAX POWER      1MOD0700
C                              CONTINUOUS)                                1MOD0710
C     IPWRSR: I*4 ARRAY (2);   POWER SOURCE CODE (1=TURBINE OR MOTOR, 2=1MOD0720
C                              MULTICYLINDER INTERNAL COMBUSTION ENGINE) 1MOD0730
C     NHELX : I*4;             NUMBER OF HELICIES (1=SINGLE, 2=DOUBLE)    1MOD0740
C     NPATH : I*4;             NUMBER OF POWER PATHS (1=SINGLE, 2=DUAL)   1MOD0750
C     NPLNT : I*4 ARRAY (3);   NUMBER OF PLANET GEARS IN EPICYCLIC SET    1MOD0760
C     NPWRIN: I*4;             NUMBER OF POWER SOURCES (INPUTS)           1MOD0770
C     NRED  : I*4;             NUMBER OF REDUCTION STAGES                 1MOD0780
C     PD    : R*4 ARRAY (3);   TRANSVERSE DIAMETRAL PITCH                 1MOD0790
C     PHI   : R*4 ARRAY (3);   TRANSVERSE PRESSURE ANGLE (RAD)            1MOD0800
C     PHIN  : R*4 ARRAY (3);   NORMAL PRESSURE ANGLE (RAD)                1MOD0810
C     PND   : R*4 ARRAY (3);   NORMAL DIAMETRAL PITCH                     1MOD0820
C     PWRIN : R*4 ARRAY (2);   SOURCE POWER INPUT (HP)                    1MOD0830
C     RPMIN : R*4 ARRAY (2);   SOURCE SPEED INPUT (RPM)                   1MOD0840
C     RPMOUT: R*4;             OUTPUT SHAFT/PROPELLER SPEED (RPM)         1MOD0850
C                                                                         1MOD0860
      COMMON /DESPRL/ PWRFAC(2,3),MGOP(2),MGP(3,2),RPMP(6,2),PWRP(6,2),D1MOD0870
     1P(3,2),DG(3,2),FACEP(3,2),GEOMI(3,2),GEOMJP(3,2),GEOMJG(3,2),NP(3,1MOD0880
     22),NG(3,2)                                                        1MOD0890
C                                                                         1MOD0900
C *** COMMON BLOCK DESPRL  (PARALLEL AXIS DESIGN PARAMETERS)            1MOD0910
C     DG    : R*4 ARRAY (3,2); DIAMETER OF GEAR (IN)                    1MOD0920
C     DP    : R*4 ARRAY (3,2); DIAMETER OF PINION (IN)                  1MOD0930
C     FACEP : R*4 ARRAY (3,2); FACEWIDTH (IN)                           1MOD0940
C     GEOMI : R*4 ARRAY (3,2); DURIBILITY GEOMETRY FACTOR               1MOD0950
```

```
C     GEOMJG: R*4 ARRAY (3,2); STRENGTH GEOMETRY FACTOR (GEAR)          1MOD0960
C     GEOMJP: R*4 ARRAY (3,2); STRENGTH GEOMETRY FACTOR (PINION)        1MOD0970
C     MGOP  : R*4 ARRAY (2);   OVERALL REDUCTION RATIO                  1MOD0980
C     MGP   : R*4 ARRAY (3,2); STAGE REDUCTION RATIO                    1MOD0990
C     NG    : I*4 ARRAY (3,2); NUMBER OF TEETH, GEAR                    1MOD1000
C     NP    : I*4 ARRAY (3,2); NUMBER OF TEETH, PINION                  1MOD1010
C     PWRFAC: R*4 ARRAY (2,3); STAGE POWER SPLIT FACTOR                 1MOD1020
C     PWRP  : R*4 ARRAY (6,2); STAGE POWER SPLIT PER GEAR (HP)          1MOD1030
C     RPMP  : R*4 ARRAY (6,2); STAGE PINION AND GEAR SPEED (RPM)        1MOD1040
C                                                                       1MOD1050
      COMMON /RESPRL/ PLVP(3,2),FBYDP(3,2),CDP(3,2),WTP(6,2),TLPIP(6,2),1MOD1060
     1UNTLDP(6,2),MFP(3,2),KFCTRP(6,2),SIGHP(3,2),SIGBP(6,2),TORQP(6,2),1MOD1070
     2PDIAMP(6,2),SCDMIN,SCDMAX,SHP,WGHTP,SPCWTP,MTHP(6,2),ISIZEP(3)   1MOD1080
C                                                                       1MOD1090
C *** COMMON BLOCK RESPRL  (PARALLEL AXIS PARAMETERS, RESULTS)          1MOD1100
C     CDP   : R*4 ARRAY (3,2); CENTER DISTANCE (THEORETICAL) (IN)       1MOD1110
C     FBYDP : R*4 ARRAY (3,2); F/D RATIO (FACEWIDTH/PINION DIAMETER)    1MOD1120
C     ISIZEP: I*4 ARRAY (3);   LENGTH, WIDTH, HEIGHT ESTIMATES (IN)     1MOD1130
C     KFCTRP: R*4 ARRAY (6,2); COMPUTED K-FACTOR                        1MOD1140
C     MFP   : R*4 ARRAY (3,2); MESH FREQUENCY (HZ)                      1MOD1150
C     MTHP  : I*4 ARRAY (6,2); TOOTH NUMBERS                            1MOD1160
C     PDIAMP: R*4 ARRAY (6,2); PITCH DIAMETERS (IN)                     1MOD1170
C     PLVP  : R*4 ARRAY (3,2); PITCH LINE VELOCITY (FPM)                1MOD1180
C     SCDMAX: R*4;             MAXIMUM SOURCE CENTER DISTANCE (IN)      1MOD1190
C     SCDMIN: R*4;             MINIMUM SOURCE CENTER DISTANCE (IN)      1MOD1200
C     SHP   : R*4;             SHAFT HORSEPOWER, OUTPUT (HP)            1MOD1210
C     SIGBP : R*4 ARRAY (6,2); BENDING STRESS (PSI)                     1MOD1220
C     SIGHP : R*4 ARRAY (3,2); CONTACT STRESS (PSI)                     1MOD1230
C     SPCWTP: R*4;             SPECIFIC WEIGHT (LB/HP)                  1MOD1240
C     TLPIP : R*4 ARRAY (6,2); TOOTH LOAD PER INCH (LB/IN)              1MOD1250
C     TORQP : R*4 ARRAY (6,2); TORQUE (K IN-LB)                         1MOD1260
C     UNTLDP: R*4 ARRAY (6,2); UNIT LOAD (PSI)                          1MOD1270
C     WGHTP : R*4;             GEAR SET WEIGHT ESTIMATE (LB)            1MOD1280
C     WTP   : R*4 ARRAY (6,2); TANGENTIAL TOOTH LOAD (LB)               1MOD1290
C                                                                       1MOD1300
      COMMON /DESEPC/ MGOE,MGE(3),RPMI(3),RPMPL(3),RPMO(3),PWRE(3),DS(3) 1MOD1310
```

```
     1,DPLN(3),DR(3),FACEE(3),GI(3),GJS(3),GJPL(3),NS(3),NPLN(3),NR(3)   1MOD1320
C                                                                        1MOD1330
C ***  COMMON BLOCK DESEPC  (EPICYCLIC DESIGN PARAMETERS)                1MOD1340
C      DPLN   : R*4 ARRAY (3);   DIAMETER OF PLANET GEARS (IN)           1MOD1350
C      DR     : R*4 ARRAY (3);   DIAMETER OF RING GEAR (IN)              1MOD1360
C      DS     : R*4 ARRAY (3);   DIAMETER OF SUN GEAR (IN)               1MOD1370
C      FACEE  : R*4 ARRAY (3);   FACEWIDTH (IN)                          1MOD1380
C      GI     : R*4 ARRAY (3);   DURABILITY GEOMETRY FACTOR (SUN/PLANETS)1MOD1390
C      GJS    : R*4 ARRAY (3);   STRENGTH GEOMETRY FACTOR (SUN)          1MOD1400
C      GJPL   : R*4 ARRAY (3);   STRENGTH GEOMETRY FACTOR (PLANET)       1MOD1410
C      MGE    : R*4 ARRAY (3);   STAGE REDUCTION RATIO                   1MOD1420
C      MGOE   : R*4;             OVERALL REDUCTION RATIO                 1MOD1430
C      NPLN   : I*4 ARRAY (3);   NUMBER OF TEETH, PLANET                 1MOD1440
C      NR     : I*4 ARRAY (3);   NUMBER OF TEETH, RING                   1MOD1450
C      NS     : I*4 ARRAY (3);   NUMBER OF TEETH, SUN                    1MOD1460
C      PWRE   : R*4 ARRAY (3);   STAGE POWER SPLIT PER GEAR PAIR (HP)    1MOD1470
C      RPMI   : R*4 ARRAY (3);   STAGE INPUT SPEED (RPM)                 1MOD1480
C      RPMO   : R*4 ARRAY (3);   STAGE OUTPUT SPEED (RPM)                1MOD1490
C      RPMPL  : R*4 ARRAY (3);   PLANET SPEED (RPM)                      1MOD1500
C                                                                        1MOD1510
      COMMON /RESEPC/ PLVE(3),FBYDE(3),CDE(3),WTE(3),TLPIE(3),UNTLDE(3), 1MOD1520
     1MFE(3,3),KFCTRE(3),SIGHE(3),SIGBE(3),TORQE(3,3),RPME(3,3),PDIAME(31MOD1530
     2,3),WGHTE,SPCWTE,MTHE(3,3),ISIZEE(3)                               1MOD1540
C                                                                        1MOD1550
C ***  COMMON BLOCK RESEPC  (EPICYCLIC PARAMETERS, RESULTS)              1MOD1560
C      CDE    : R*4 ARRAY (3);   CENTER DISTANCE (THEORETICAL) (IN)      1MOD1570
C      FBYDE  : R*4 ARRAY (3);   F/D RATIO (FACEWIDTH/SUN DIAMETER)      1MOD1580
C      ISIZEE: I*4 ARRAY (3);    LENGTH, WIDTH, HEIGHT ESTIMATES (IN)    1MOD1590
C      KFCTRE: R*4 ARRAY (3);    COMPUTED K-FACTOR                       1MOD1600
C      MFE    : R*4 ARRAY (3,3); MESH FREQUENCY (HZ)                     1MOD1610
C      MTHE   : I*4 ARRAY (3,3); TOOTH NUMBERS                           1MOD1620
C      PDIAME: R*4 ARRAY (3,3);  PITCH DIAMETERS (IN)                    1MOD1630
C      PLVE   : R*4 ARRAY (3);   PITCH LINE VELOCITY (FPM)               1MOD1640
C      RPME   : R*4 ARRAY (3,3); GEAR SPEEDS (RPM)                       1MOD1650
C      SIGBE  : R*4 ARRAY (3);   BENDING STRESS (PSI)                    1MOD1660
C      SIGHE  : R*4 ARRAY (3);   CONTACT STRESS (PSI)                    1MOD1670
```

```
C     SPCWTE: R*4;                SPECIFIC WEIGHT (LB/HP)                1MOD1680
C     TLPIE : R*4 ARRAY (3);      TOOTH LOAD PER IN (LB/IN)              1MOD1690
C     TORQE : R*4 ARRAY (3,3);    TORGUE (K IN-LB)                       1MOD1700
C     UNTLDE: R*4 ARRAY (3);      UNIT LOAD (PSI)                        1MOD1710
C     WGHTE : R*4;                GEAR SET WEIGHT ESTIMATE (LB)          1MOD1720
C     WTE   : R*4 ARRAY (3);      TANGENTIAL TOOTH LOAD (LB)             1MOD1730
C                                                                        1MOD1740
C                                                                        1MOD1750
C     EXECUTE REGAD                                                      1MOD1760
C                                                                        1MOD1770
      DATA YES/1HY/                                                      1MOD1780
      WRITE (6,90)                                                       1MOD1790
      WRITE (6,100)                                                      1MOD1800
      READ (5,130) REP                                                   1MOD1810
      IF (REP.EQ.YES) CALL DSCRPT                                        1MOD1820
      WRITE (6,120)                                                      1MOD1830
C                                                                        1MOD1840
C     DESIGN / ANALYSIS OPTION SELECTION                                 1MOD1850
C                                                                        1MOD1860
      WRITE (6,70)                                                       1MOD1870
      READ (5,*) ICODE                                                   1MOD1880
      IF (ICODE.LT.1) ICODE=1                                            1MOD1890
      IF (ICODE.GT.2) ICODE=2                                            1MOD1900
C                                                                        1MOD1910
C     CONFIGURATION SELECTION                                            1MOD1920
C                                                                        1MOD1930
      WRITE (6,80)                                                       1MOD1940
      READ (5,*) IARR                                                    1MOD1950
      IF (IARR.LT.1) IARR=1                                              1MOD1960
      IF (IARR.GT.2) IARR=2                                              1MOD1970
      CALL INPUT                                                         1MOD1980
      WRITE (6,110)                                                      1MOD1990
      READ (5,130) REP                                                   1MOD2000
      IF (REP.EQ.YES) CALL AGMA                                          1MOD2010
      L=ICODE+(IARR-1)*2                                                 1MOD2020
      GO TO (10,20,40,50), L                                             1MOD2030
```

```
C                                                                      1MOD2040
C     PARALLEL AXIS REDUCTION GEARS                                    1MOD2050
C                                                                      1MOD2060
C                                                                      1MOD2070
C     DESIGN                                                           1MOD2080
C                                                                      1MOD2090
10    CALL PRLDES                                                      1MOD2100
      GO TO 30                                                         1MOD2110
C                                                                      1MOD2120
C     ANALYSIS                                                         1MOD2130
C                                                                      1MOD2140
20    CALL PRLANL                                                      1MOD2150
C                                                                      1MOD2160
C     COMPLETE PARALLEL AXIS COMPUTATIONS                              1MOD2170
C                                                                      1MOD2180
30    CALL PRLRES                                                      1MOD2190
      CALL PRLSIZ                                                      1MOD2200
      CALL PRLOUT                                                      1MOD2210
      STOP                                                             1MOD2220
C                                                                      1MOD2230
C     EPICYCLIC REDUCTION GEARS                                        1MOD2240
C                                                                      1MOD2250
C                                                                      1MOD2260
C     DESIGN                                                           1MOD2270
C                                                                      1MOD2280
40    CALL EPCDES                                                      1MOD2290
      GO TO 60                                                         1MOD2300
C                                                                      1MOD2310
C     ANALYSIS                                                         1MOD2320
C                                                                      1MOD2330
50    CALL EPCANL                                                      1MOD2340
C                                                                      1MOD2350
C     COMPLETE EPICYCLIC COMPUTATIONS                                  1MOD2360
C                                                                      1MOD2370
60    CALL EPCRES                                                      1MOD2380
      CALL EPCSIZ                                                      1MOD2390
```

```
      CALL EPCOUT                                                        1MOD2400
      STOP                                                               1MOD2410
C                                                                        1MOD2420
C     FORMAT STATMENTS                                                   1MOD2430
C                                                                        1MOD2440
C                                                                        1MOD2450
70    FORMAT (/,1X,52H** ENTER PROGRAM OPTION CODE (1=DESIGN, 2=ANALYSIS1MOD2460
     1):)                                                                1MOD2470
80    FORMAT (/,1X,57H** ENTER ARRANGEMENT CODE (1=PARALLEL AXIS, 2=EPIC1MOD2480
     1YCLIC):)                                                           1MOD2490
90    FORMAT (1H1,72(1H*),/,1X,2H**,68(1H ),2H**,/,1X,2H**,32(1H ),5HREG1MOD2500
     1AD,31(1H ),2H**,/,1X,2H**,17(1H ),34HREDUCTION GEAR ANALYSIS AND D1MOD2510
     2ESIGN,17(1H ),2H**,/,1X,2H**,68(1H ),2H**,/,1X,72(1H*),////)      1MOD2520
100   FORMAT (4X,46HDO YOU DESIRE A PROGRAM DESCRIPTION? (Y OR N):)      1MOD2530
110   FORMAT (//,4X,60HDO YOU DESIRE A LISTING OF THE PRE-PROGRAMMED CON1MOD2540
     1STANTS USED,/,1X,35HIN THE AGMA FORMULATIONS? (Y OR N):)           1MOD2550
120   FORMAT (//,4X,56HYOU WILL NOW BE ASKED TO PROVIDE THE PARAMETERS R1MOD2560
     1EQUIRED,/,1X,39HFOR THE ANALYSIS OR DESIGN IN THIS RUN.,//)       1MOD2570
130   FORMAT (1A1)                                                       1MOD2580
      END                                                                1MOD2590
C*****************************************************************     1MOD2600
C     *     *     *     *     *     *     *     *     *     *     *     1MOD2610
C*****************************************************************     1MOD2620
      BLOCK DATA                                                         1MOD2630
      REAL MGOP,MGP,MGOE,MGE,MFP,MFE,KFCTRP,KFCTRE                       1MOD2640
      COMMON /AGMAH/ SFH(2,2),CV(3),CS,CM(2),CF,CO(2),SAC(6),CP,CL(2),CH1MOD2650
     1,CT,CR(6)                                                          1MOD2660
      COMMON /AGMAB/ SFB(2,2),AKV,AKS,AKM,AKO(2),SAT(6),AKL(2),AKR(6),AK1MOD2670
     1T                                                                  1MOD2680
      COMMON /DESDAT/ PWRIN(2),RPMIN(2),RPMOUT,DHELIX(3),HELIX(3),PD(3),1MOD2690
     1PND(3),DPHI(3),PHI(3),DPHIN(3),PHIN(3),NDIFP,IARR,IEPIC(3),IHARD(31MOD2700
     2,2),IOPRO,NPWRIN,IPWRSR(2),NRED,NPATH,NPLNT(3),NHELX               1MOD2710
      COMMON /DESPRL/ PWRFAC(2,3),MGOP(2),MGP(3,2),RPMP(6,2),PWRP(6,2),D1MOD2720
     1P(3,2),DG(3,2),FACEP(3,2),GEOMI(3,2),GEOMJP(3,2),GEOMJG(3,2),NP(3,1MOD2730
     22),NG(3,2)                                                         1MOD2740
      COMMON /RESPRL/ PLVP(3,2),FBYDP(3,2),CDP(3,2),WTP(6,2),TLPIP(6,2),1MOD2750
```

```
     1UNTLDP(6,2),MFP(3,2),KFCTRP(6,2),SIGHP(3,2),SIGBP(6,2),TORQP(6,2),1MOD2760
     2PDIAMP(6,2),SCDMIN,SCDMAX,SHP,WGHTP,SPCWTP,TRQOUT,MTHP(6,2),ISIZEP1MOD2770
     3(3)                                                              1MOD2780
      COMMON /DESEPC/ MGOE,MGE(3),RPMI(3),RPMPL(3),RPMO(3),PWRE(3),DS(3)1MOD2790
     1,DPLN(3),DR(3),FACEE(3),GI(3),GJS(3),GJPL(3),NS(3),NPLN(3),NR(3)  1MOD2800
      COMMON /RESEPC/ PLVE(3),FBYDE(3),CDE(3),WTE(3),TLPIE(3),UNTLDE(3),1MOD2810
     1MFE(3,3),KFCTRE(3),SIGHE(3),SIGBE(3),TORQE(3,3),RPME(3,3),PDIAME(31MOD2820
     2,3),WGHTE,SPCWTE,MTHE(3,3),ISIZEE(3)                             1MOD2830
      DATA SFH/1.,1.5,1.5,1.75/,CV/1.,.83,.69/,CS/1./,CM/1.25,1.35/,CF/11MOD2840
     1./,CO/1.15,1.14/,SAC/95000.,108000.,125000.,146000.,165000.,18200 1MOD2850
     2./,CP/2300./,CL/.80,.68/,CH/1./,CT/1./,CR/1.160,1.185,1.224,1.273,1MOD2860
     31.312,1.350/                                                     1MOD2870
      DATA SFB/1.,1.5,1.5,1.75/,AKV/.7/,AKS/1./,AKM/1.1/,AKO/1.21,1.28/,1MOD2880
     1SAT/32900.,38100.,44500.,51750.,54250.,61000./,AKL/.80,.68/,AKR/1.1MOD2890
     2160,1.180,1.230,1.288,1.313,1.330/,AKT/1./                       1MOD2900
      DATA IPWRSR/1,1/,PWRFAC/1.,1.,1.,.5,.5,.25/,MGOP/2*1./,MGOE/1./,PW1MOD2910
     1RIN/2*0./,RPMIN/2*0.0/                                           1MOD2920
      END                                                              1MOD2930
C*****************************************************************    1MOD2940
C     *     *     *     *     *     *     *     *     *     *     *     1MOD2950
C*****************************************************************    1MOD2960
      SUBROUTINE DSCRPT                                                1MOD2970
C                                                                      1MOD2980
C     CODED BY:  LT J.L. PAQUETTE, USN           JAN 1982              1MOD2990
C                NAVAL POSTGRADUATE SCHOOL  MONTEREY, CA 93940         1MOD3000
C                                                                      1MOD3010
C                                                                      1MOD3020
C     SUBPROGRAM TO PROVIDE A GENERAL DESCRIPTION OF THE REGAD PACKAGE  1MOD3030
C     AND AN OPTION TO STOP THE RUN IF ONLY THE DESCRIPTION IS DESIRED. 1MOD3040
C                                                                      1MOD3050
      DATA YES/1HY/                                                    1MOD3060
      WRITE (6,10)                                                     1MOD3070
      WRITE (6,20)                                                     1MOD3080
      WRITE (6,30)                                                     1MOD3090
      WRITE (6,40)                                                     1MOD3100
      WRITE (6,50)                                                     1MOD3110
```

```
      WRITE (6,60)                                                      1MOD3120
      READ (5,80) REP                                                   1MOD3130
      IF (REP.EQ.YES) RETURN                                            1MOD3140
C                                                                       1MOD3150
C     STOP BY USER                                                      1MOD3160
C                                                                       1MOD3170
      WRITE (6,70)                                                      1MOD3180
      STOP                                                              1MOD3190
C                                                                       1MOD3200
C     FORMAT STATEMENTS                                                 1MOD3210
C                                                                       1MOD3220
C                                                                       1MOD3230
10    FORMAT (1H1,65(1H*),/4X,59H  THIS PROGRAM IS CAPABLE OF PERFORMING1MOD3240
     1 PRELIMINARY DESIGN /4X,59HOR ANALYSIS OF MULTIREDUCTION, PARALLEL1MOD3250
     2 AXIS AND EPICYCLIC /4X,59HREDUCTION GEARS.  THE CAPABILITIES AND 1MOD3260
     3FEATURES OF THE PRO-/4X,20HGRAM ARE AS FOLLOWS:)                  1MOD3270
20    FORMAT (/9X,44H1) MAXIMUM OF THREE REDUCTION STAGES ALLOWED/9X,38H1MOD3280
     12) CHOICE OF SINGLE OR DOUBLE HELICALS/9X,37H3) WEIGHT AND SIZE ES1MOD3290
     2TIMATES PROVIDED/9X,27H4) FOR PARALLEL AXIS GEARS:/12X,34H- ONE OR1MOD3300
     3 TWO POWER SOURCES ALLOWED/12X,36H- SINGLE OR DUAL POWER PATHS ALL1MOD3310
     4OWED)                                                             1MOD3320
30    FORMAT (9X,23H5) FOR EPICYCLIC GEARS:/12X,31H- ONLY ONE POWER SOUR1MOD3330
     1CE ALLOWED/12X,36H- LIMITED TO 3, 4, OR 5 PLANET GEARS/12X,44H- ON1MOD3340
     2LY SIMPLE EPICYCLICS PER REDUCTION STAGE/12X,41H- PLANETARY OR STA1MOD3350
     3R ARRANGEMENTS POSSIBLE)                                          1MOD3360
40    FORMAT (/4X,59H  THE STANDARDS OF THE AMERICAN GEAR MANUFACTURING 1MOD3370
     1ASSOCI- /4X,59HATION WERE USED AS A BASIS FOR THIS PROGRAM.  THE C1MOD3380
     2ONSTANTS/4X,59HUSED IN THE AGMA FORMULATIONS ARE BASED ON THOSE PU1MOD3390
     3BLISHED /4X,59HBY F. A. THOMA, OF DELAVAL TURBINE, FOR MARINE PROP1MOD3400
     4ULSION  /4X,59HGEARS.  AN OPTION IS PROVIDED DURING EXECUTION OF T1MOD3410
     5HE PRO- /4X,59HGRAM TO OBTAIN A LISTING OF THESE CONSTANTS, AND TO1MOD3420
     6 CHANGE /4X,44HANY OF THEM FOR OTHER POSSIBLE APPLICATIONS./4X,59H1MOD3430
     7  IT SHOULD BE NOTED THAT THE STRESSES LISTED IN THE OUTPUT/4X,59H1MOD3440
     8ARE THOSE COMPUTED FROM THE AGMA FORMULATIONS AND ARE NOT  /4X,32H1MOD3450
     9FROM A DETAILED STRESS ANALYSIS.)                                 1MOD3460
50    FORMAT (//,4X,54HFOR MORE SPECIFIC INFORMATION, SEE THE USERS MANU1MOD3470
```

```
     1AL OR,/,4X,32HOBTAIN A LISTING OF THE PROGRAM.,/,1X,65(1H*))      1MOD3480
60    FORMAT (//,4X,53HDO YOU WISH THE PROGRAM TO CONTINUE INTO THE ANAL1MOD3490
     1YSIS,/,4X,30HAND DESIGN SEGMENTS? (Y OR N):)                      1MOD3500
70    FORMAT (///,5X,35H***** PROGRAM STOPPED BY USER *****)            1MOD3510
80    FORMAT (1A1)                                                      1MOD3520
      END                                                               1MOD3530
C*****************************************************************    1MOD3540
C     *     *     *     *     *     *     *     *     *     *     *     1MOD3550
C*****************************************************************    1MOD3560
      SUBROUTINE INPUT                                                  1MOD3570
C                                                                       1MOD3580
C     CODED BY:  LT J.L. PAQUETTE, USN           JAN 1982               1MOD3590
C                NAVAL POSTGRADUATE SCHOOL  MONTEREY, CA 93940        1MOD3600
C                                                                       1MOD3610
C     SUBPROGRAM TO PROVIDE USER INPUT OF ALL USER-SPECIFIED DESIGN     1MOD3620
C     VARIABLES AND OPTIONS                                             1MOD3630
C                                                                       1MOD3640
      COMMON /DESDAT/ PWRIN(2),RPMIN(2),RPMOUT,DHELIX(3),HELIX(3),PD(3),1MOD3650
     1PND(3),DPHI(3),PHI(3),DPHIN(3),PHIN(3),NDIFP,IARR,IEPIC(3),IHARD(31MOD3660
     2,2),IOPRO,NPWRIN,IPWRSR(2),NRED,NPATH,NPLNT(3),NHELX              1MOD3670
C                                                                       1MOD3680
C     INITIALIZE                                                        1MOD3690
C                                                                       1MOD3700
      DATA YES/1HY/                                                     1MOD3710
      DEGRAD=4.*ATAN(1.)/180.                                           1MOD3720
C                                                                       1MOD3730
C     COMMON DATA                                                       1MOD3740
C                                                                       1MOD3750
      WRITE (6,230)                                                     1MOD3760
      READ (5,*) IOPRO                                                  1MOD3770
      IF (IOPRO.LT.1) IOPRO=1                                           1MOD3780
      IF (IOPRO.GT.2) IOPRO=2                                           1MOD3790
10    WRITE (6,240)                                                     1MOD3800
      READ (5,*) NRED                                                   1MOD3810
      IF ((NRED.GE.1).AND.(NRED.LE.3)) GO TO 20                         1MOD3820
      WRITE (6,250) NRED                                                1MOD3830
```

```
      GO TO 10                                                    1MOD3840
20    WRITE (6,260)                                               1MOD3850
      READ (5,*) NHELX                                            1MOD3860
      IF (NHELX.LT.1) NHELX=1                                     1MOD3870
      IF (NHELX.GT.2) NHELX=2                                     1MOD3880
      GO TO (30,40), IARR                                         1MOD3890
C                                                                 1MOD3900
C     PARALLEL AXIS DATA                                          1MOD3910
C                                                                 1MOD3920
30    WRITE (6,270)                                               1MOD3930
      READ (5,*) NPATH                                            1MOD3940
      IF (NPATH.LT.1) NPATH=1                                     1MOD3950
      IF (NPATH.GT.2) NPATH=2                                     1MOD3960
      GO TO 50                                                    1MOD3970
C                                                                 1MOD3980
C     EPICYCLIC DATA                                              1MOD3990
C                                                                 1MOD4000
40    NPWRIN=1                                                    1MOD4010
      NPATH=2                                                     1MOD4020
      GO TO 60                                                    1MOD4030
C                                                                 1MOD4040
C     COMMON DESIGN DATA                                          1MOD4050
C                                                                 1MOD4060
C                                                                 1MOD4070
C     POWER SOURCE DATA                                           1MOD4080
C                                                                 1MOD4090
50    WRITE (6,280)                                               1MOD4100
      READ (5,*) NPWRIN                                           1MOD4110
      IF (NPWRIN.LT.1) NPWRIN=1                                   1MOD4120
      IF (NPWRIN.GT.2) NPWRIN=2                                   1MOD4130
60    WRITE (6,290)                                               1MOD4140
      READ (5,550) REP1                                           1MOD4150
      GO TO (70,80), NPWRIN                                       1MOD4160
C                                                                 1MOD4170
C     SINGLE POWER SOURCE                                         1MOD4180
C                                                                 1MOD4190
```

```
70    IF (REP1.EQ.YES) IPWRSR(1)=2                                          1MOD4200
      WRITE (6,300)                                                         1MOD4210
      READ (5,*) PWRIN(1),RPMIN(1)                                          1MOD4220
      GO TO 110                                                             1MOD4230
C                                                                           1MOD4240
C     DUAL POWER SOURCES                                                    1MOD4250
C                                                                           1MOD4260
80    IF (REP1.NE.YES) GO TO 100                                            1MOD4270
      WRITE (6,310)                                                         1MOD4280
      READ (5,*) IENG                                                       1MOD4290
      IF ((IENG.GE.1).AND.(IENG.LE.3)) GO TO 90                             1MOD4300
      WRITE (6,320) IENG                                                    1MOD4310
      GO TO 80                                                              1MOD4320
90    IF ((IENG.EQ.1).OR.(IENG.EQ.3)) IPWRSR(1)=2                           1MOD4330
      IF ((IENG.EQ.2).OR.(IENG.EQ.3)) IPWRSR(2)=2                           1MOD4340
100   WRITE (6,330)                                                         1MOD4350
      READ (5,*) PWRIN(1),RPMIN(1)                                          1MOD4360
      WRITE (6,340)                                                         1MOD4370
      READ (5,*) PWRIN(2),RPMIN(2)                                          1MOD4380
C                                                                           1MOD4390
C     OUTPUT SPEED OF REDUCTION SET                                         1MOD4400
C                                                                           1MOD4410
110   NDIFP=NPWRIN                                                          1MOD4420
      IF ((NPWRIN.EQ.2).AND.(PWRIN(1).EQ.PWRIN(2)).AND.(RPMIN(1).EQ.RPMI1MOD4430
     1N(2))) NDIFP=1                                                        1MOD4440
      WRITE (6,350)                                                         1MOD4450
      READ (5,*) RPMOUT                                                     1MOD4460
C                                                                           1MOD4470
C     DESIGN PARAMETER DATA                                                 1MOD4480
C                                                                           1MOD4490
      WRITE (6,360)                                                         1MOD4500
      READ (5,*) IPD                                                        1MOD4510
      IF (IPD.LT.1) IPD=1                                                   1MOD4520
      IF (IPD.GT.2) IPD=2                                                   1MOD4530
      WRITE (6,370)                                                         1MOD4540
      READ (5,*) IPHI                                                       1MOD4550
```

```
      IF (IPHI.LT.1) IPHI=1                                                  1MOD4560
      IF (IPHI.GT.2) IPHI=2                                                  1MOD4570
      DO 220 I=1,NRED                                                        1MOD4580
      WRITE (6,380) I                                                        1MOD4590
  120 WRITE (6,390)                                                          1MOD4600
      READ (5,*) DHELIX(I)                                                   1MOD4610
      IF ((NHELX.EQ.1).AND.(DHELIX(I).GE.15.0).AND.(DHELIX(I).LE.25.0))      1MOD4620
     1GO TO 130                                                              1MOD4630
      IF ((NHELX.EQ.2).AND.(DHELIX(I).GE.25.0).AND.(DHELIX(I).LE.50.0))      1MOD4640
     1GO TO 130                                                              1MOD4650
      WRITE (6,400) DHELIX(I),NHELX                                          1MOD4660
      GO TO 120                                                              1MOD4670
  130 HELIX(I)=DHELIX(I)*DEGRAD                                              1MOD4680
      GO TO (140,150), IPD                                                   1MOD4690
  140 WRITE (6,410)                                                          1MOD4700
      READ (5,*) PD(I)                                                       1MOD4710
      PND(I)=PD(I)/COS(HELIX(I))                                             1MOD4720
      GO TO 160                                                              1MOD4730
  150 WRITE (6,420)                                                          1MOD4740
      READ (5,*) PND(I)                                                      1MOD4750
      PD(I)=PND(I)*COS(HELIX(I))                                             1MOD4760
  160 GO TO (170,180), IPHI                                                  1MOD4770
  170 WRITE (6,430)                                                          1MOD4780
      READ (5,*) DPHI(I)                                                     1MOD4790
      PHI(I)=DPHI(I)*DEGRAD                                                  1MOD4800
      ARG=TAN(PHI(I))*COS(HELIX(I))                                          1MOD4810
      PHIN(I)=ATAN(ARG)                                                      1MOD4820
      DPHIN(I)=PHIN(I)/DEGRAD                                                1MOD4830
      GO TO 190                                                              1MOD4840
  180 WRITE (6,440)                                                          1MOD4850
      READ (5,*) DPHIN(I)                                                    1MOD4860
      PHIN(I)=DPHIN(I)*DEGRAD                                                1MOD4870
      ARG=TAN(PHIN(I))/COS(HELIX(I))                                         1MOD4880
      PHI(I)=ATAN(ARG)                                                       1MOD4890
      DPHI(I)=PHI(I)/DEGRAD                                                  1MOD4900
  190 IF (IARR.EQ.1) GO TO 210                                               1MOD4910
```

```
      WRITE (6,450)                                                     1MOD4920
      READ (5,*) IEPIC(I)                                               1MOD4930
      IF (IEPIC(I).LT.1) IEPIC(I)=1                                     1MOD4940
      IF (IEPIC(I).GT.2) IEPIC(I)=2                                     1MOD4950
200   WRITE (6,460)                                                     1MOD4960
      READ (5,*) NPLNT(I)                                               1MOD4970
      IF ((NPLNT(I).GE.3).AND.(NPLNT(I).LE.5)) GO TO 210                1MOD4980
      WRITE (6,470) NPLNT(I)                                            1MOD4990
      GO TO 200                                                         1MOD5000
210   WRITE (6,480)                                                     1MOD5010
      IF (IARR.EQ.1) WRITE (6,490)                                      1MOD5020
      IF (IARR.EQ.2) WRITE (6,500)                                      1MOD5030
      READ (5,*) IHARD(I,1),IHARD(I,2)                                  1MOD5040
      IF ((IHARD(I,1).GE.1).AND.(IHARD(I,1).LE.6).AND.(IHARD(I,2).GE.1).1MOD5050
     1AND.(IHARD(I,2).LE.6)) GO TO 220                                  1MOD5060
      IF (IARR.EQ.1) WRITE (6,510) IHARD(I,1),IHARD(I,2)                1MOD5070
      IF (IARR.EQ.2) WRITE (6,520) IHARD(I,1),IHARD(I,2)                1MOD5080
      GO TO 210                                                         1MOD5090
220   CONTINUE                                                          1MOD5100
C                                                                       1MOD5110
C     DATA CORRECTION                                                   1MOD5120
C                                                                       1MOD5130
      WRITE (6,530)                                                     1MOD5140
      READ (5,550) REP                                                  1MOD5150
      IF (REP.NE.YES) RETURN                                            1MOD5160
      WRITE (6,540)                                                     1MOD5170
      STOP                                                              1MOD5180
C                                                                       1MOD5190
C     FORMAT STATEMENTS                                                 1MOD5200
C                                                                       1MOD5210
C                                                                       1MOD5220
230   FORMAT (//,4X,38HCHOOSE OPERATIONAL PROFILE CODE BELOW:,/,4X,16HOP1MOD5230
     1ERATIONAL MODE,4X,15HSERVICE PROFILE,4X,4HCODE,/,7X,10HFULL POWER,1MOD5240
     28X,13H5 PERCENT MAX,7X,1H1,/,6X,12HMAXIMUM LOAD,9X,10HCONTINUOUS,81MOD5250
     3X,1H2,//,1X,34H** ENTER OPERATIONAL PROFILE CODE:)                1MOD5260
240   FORMAT (/,1X,43H** ENTER NUMBER OF REDUCTIONS (1, 2, OR 3):)      1MOD5270
```

```
250   FORMAT (4X,I2,42H IS NOT A LEGITIMATE NUMBER OF REDUCTIONS.)        1MOD5280
260   FORMAT (//,4X,32HCHOOSE DESIRED HELIX TYPE BELOW:,/,8X,6H TYPE ,4X1MOD5290
     1,5HANGLE,4X,4HCODE,/,8X,6HSINGLE,4X,5H15-25,6X,1H1,/,8X,6HDOUBLE,41MOD5300
     2X,5H25-50,6X,1H2,//,1X,20H** ENTER HELIX CODE:)                    1MOD5310
270   FORMAT (/,1X,50H** ENTER NUMBER OF POWER PATHS (1=SINGLE, 2=DUAL):1MOD5320
     1)                                                                  1MOD5330
280   FORMAT (/,1X,42H** ENTER NUMBER OF POWER SOURCES (1 OR 2):)         1MOD5340
290   FORMAT (/,4X,64HWILL ANY POWER SOURCE BE A MULTICYLINDER I. C. ENG1MOD5350
     1INE? (Y OR N):)                                                    1MOD5360
300   FORMAT (/,1X,54H** ENTER POWER AND SPEED OF THE POWER SOURCE (HP,R1MOD5370
     1PM):)                                                              1MOD5380
310   FORMAT (//,4X,52HCHOOSE WHICH SOURCE(S) WILL BE AN I.C. ENGINE BEL1MOD5390
     1OW:,/,20X,12HPOWER SOURCE,4X,4HCODE,/,21X,10HHIGH POWER,7X,1H1,/,21MOD5400
     21X,10HLOW  POWER,7X,1H2,/,24X,4HBOTH,10X,1H3,//,1X,26H** ENTER I.C1MOD5410
     3. ENGINE CODE:)                                                    1MOD5420
320   FORMAT (4X,I2,38H IS NOT A LEGITIMATE I.C. ENGINE CODE.)            1MOD5430
330   FORMAT (/,1X,55H** ENTER POWER AND SPEED OF HIGH POWER SOURCE (HP,1MOD5440
     1RPM):)                                                             1MOD5450
340   FORMAT (/,1X,54H** ENTER POWER AND SPEED OF LOW POWER SOURCE (HP,R1MOD5460
     1PM):)                                                              1MOD5470
350   FORMAT (/,1X,44H** ENTER OUTPUT SHAFT/PROPELLER SPEED (RPM):)      1MOD5480
360   FORMAT (//,4X,39HWHICH DIAMETRAL PITCH WILL YOU SPECIFY?,/,4X,25H(1MOD5490
     11=TRANSVERSE, 2=NORMAL):)                                          1MOD5500
370   FORMAT (//,4X,38HWHICH PRESSURE ANGLE WILL YOU SPECIFY?,/,4X,25H(11MOD5510
     1=TRANSVERSE, 2=NORMAL):)                                           1MOD5520
380   FORMAT (//,4X,48HTHE FOLLOWING PARAMETERS ARE REQUESTED FOR STAGE,1MOD5530
     1I2,2H :)                                                           1MOD5540
390   FORMAT (/,1X,31H** ENTER HELIX ANGLE (DEGREES):)                    1MOD5550
400   FORMAT (//,4X,24HTHE HELIX ANGLE ENTERED,,F5.1,25H, DOES NOT AGREE1MOD5560
     1 WITH THE,/,4X,11HHELIX TYPE=,I2,36H CHOSEN.  TYPE=1, SINGLE: 15-21MOD5570
     25DEG.,,/,4X,26HTYPE=2, DOUBLE: 25-50 DEG.)                         1MOD5580
410   FORMAT (/,1X,36H** ENTER TRANSVERSE DIAMETRAL PITCH:)               1MOD5590
420   FORMAT (/,1X,32H** ENTER NORMAL DIAMETRAL PITCH:)                   1MOD5600
430   FORMAT (/,1X,45H** ENTER TRANSVERSE PRESSURE ANGLE (DEGREES):)      1MOD5610
440   FORMAT (/,1X,41H** ENTER NORMAL PRESSURE ANGLE (DEGREES):)          1MOD5620
450   FORMAT (/,1X,46H** ENTER EPICYCLIC CODE (1=PLANETARY, 2=STAR):)     1MOD5630
```

```
460    FORMAT (/,1X,41H** ENTER NUMBER OF PLANET GEARS (3 TO 5):)          1MOD5640
470    FORMAT (//,4X,I2,39H IS NOT A LEGITIMATE NUMBER OF PLANETS.)        1MOD5650
480    FORMAT (//,4X,33HCHOOSE GEAR HARDNESS RANGE BELOW:,/,9X,3HBHN,8X,41MOD5660
      1HCODE,/,6X,9H160 - 200,7X,1H1,/,6X,9H200 - 240,7X,1H2,/,6X,9H240 -1MOD5670
      2 300,7X,1H3,/,6X,9H300 - 360,7X,1H4,/,6X,9H360 - 400,7X,1H5,/,6X,91MOD5680
      3H400 - 640,7X,1H6)                                                 1MOD5690
490    FORMAT (/,1X,59H** ENTER HARDNESS CODES FOR PINION AND GEAR (HCPIN1MOD5700
      1,HCGEAR):)                                                         1MOD5710
500    FORMAT (/,1X,64H** ENTER HARDNESS CODES FOR SUN/PLANETS AND RING (1MOD5720
      1HCSUN,HCRING):)                                                    1MOD5730
510    FORMAT (//,4X,25HTHE PINION HARDNESS CODE,,I2,31H AND/OR THE GEAR 1MOD5740
      1HARDNESS CODE,,/,4X,I2,26H ARE NOT LEGITIMATE CODES.)              1MOD5750
520    FORMAT (//,4X,29HTHE SUN/PLANET HARDNESS CODE,,I2,25H AND/OR THE R1MOD5760
      1ING HARDNESS,/,4X,5HCODE,,I2,26H ARE NOT LEGITIMATE CODES.)        1MOD5770
530    FORMAT (//,4X,61HTO MAKE CORRECTIONS TO DATA JUST ENTERED, THE PRO1MOD5780
      1GRAM MUST BE,/,4X,65HABORTED AND RE-STARTED.  DO YOU WISH TO ABORT1MOD5790
      2 THIS RUN? (Y OR N):)                                              1MOD5800
540    FORMAT (///,5X,44H***** RUN ABORTED BY USER --- RE-START *****)     1MOD5810
550    FORMAT (1A1)                                                        1MOD5820
       END                                                                 1MOD5830
C*******************************************************************      1MOD5840
C      *     *     *     *     *     *     *     *     *     *     *      1MOD5850
C*******************************************************************      1MOD5860
       SUBROUTINE AGMA                                                     1MOD5870
C                                                                          1MOD5880
C      CODED BY:  LT J.L. PAQUETTE, USN           JAN 1982                 1MOD5890
C                 NAVAL POSTGRADUATE SCHOOL  MONTEREY, CA 93940            1MOD5900
C                                                                          1MOD5910
C      SUBPROGRAM TO LIST AND OPTIONALLY CHANGE THE PRE-PROGRAMMED         1MOD5920
C      AGMA CONSTANTS                                                      1MOD5930
C                                                                          1MOD5940
C      EXTERNAL SUBPROGRAM(S) REQUIRED: FUNCTION CKDATA                    1MOD5950
C                                                                          1MOD5960
       COMMON /AGMAB/ SFB(2,2),AKV,AKS,AKM,AKO(2),SAT(6),AKL(2),AKR(6),AK1MOD5970
      1T                                                                  1MOD5980
       COMMON /AGMAH/ SFH(2,2),CV(3),CS,CM(2),CF,CO(2),SAC(6),CP,CL(2),CH1MOD5990
```

```
     1,CT,CR(6)                                                          1MOD6000
C                                                                        1MOD6010
C     INITIALIZATION                                                     1MOD6020
C                                                                        1MOD6030
      DATA YES/1HY/,EP/30.E06/,EG/30.E06/,VP/.3/,VG/.3/                  1MOD6040
      ID=0                                                               1MOD6050
C                                                                        1MOD6060
C     PROVIDE LISTING OF CONSTANTS AND THEIR VALUES                      1MOD6070
C                                                                        1MOD6080
10    WRITE (6,340)                                                      1MOD6090
      WRITE (6,350) SFB(1,1),SFB(1,2),SFB(2,1),SFB(2,2)                  1MOD6100
      WRITE (6,360) (CV(I),I=1,3),CS,CM(1),CM(2),CF                      1MOD6110
      WRITE (6,370) CO(1),CO(2),CP,CL(1),CL(2),CH,CT                     1MOD6120
      WRITE (6,380) (CR(I),I=1,6)                                        1MOD6130
      WRITE (6,390) (SAC(I),I=1,6)                                       1MOD6140
      WRITE (6,400) AKV,AKS,AKM,AKO(1),AKO(2),AKL(1),AKL(2)              1MOD6150
      WRITE (6,410) AKT,(AKR(I),I=1,6)                                   1MOD6160
      WRITE (6,420) (SAT(I),I=1,6)                                       1MOD6170
      WRITE (6,430)                                                      1MOD6180
      WRITE (6,440)                                                      1MOD6190
      IF (ID.EQ.99) RETURN                                               1MOD6200
      WRITE (6,450)                                                      1MOD6210
      READ (5,700) REP                                                   1MOD6220
      IF (REP.NE.YES) RETURN                                             1MOD6230
C                                                                        1MOD6240
C     CHANGE SELECTED CONSTANTS                                          1MOD6250
C                                                                        1MOD6260
      WRITE (6,460)                                                      1MOD6270
20    WRITE (6,470)                                                      1MOD6280
      READ (5,*) ID                                                      1MOD6290
      IF (ID.EQ.99) GO TO 10                                             1MOD6300
      IF ((ID.LT.1).OR.(ID.GT.20)) GO TO 20                              1MOD6310
      GO TO (30,50,70,80,100,110,130,140,160,170,180,200,220,230,240,250 1MOD6320
     1,270,290,300,320), ID                                              1MOD6330
30    DO 40 I=1,2                                                        1MOD6340
      DO 40 J=1,2                                                        1MOD6350
```

```
      WRITE (6,480) I,J                                          1MOD6360
      SFB(I,J)=CKDATA(SFB(I,J))                                  1MOD6370
      SFH(I,J)=SFB(I,J)                                          1MOD6380
40    CONTINUE                                                   1MOD6390
      GO TO 20                                                   1MOD6400
50    DO 60 I=1,3                                                1MOD6410
      WRITE (6,490) I                                            1MOD6420
      CV(I)=CKDATA(CV(I))                                        1MOD6430
60    CONTINUE                                                   1MOD6440
      GO TO 20                                                   1MOD6450
70    WRITE (6,500)                                              1MOD6460
      CS=CKDATA(CS)                                              1MOD6470
      GO TO 20                                                   1MOD6480
80    DO 90 I=1,2                                                1MOD6490
      WRITE (6,510) I                                            1MOD6500
      CM(I)=CKDATA(CM(I))                                        1MOD6510
90    CONTINUE                                                   1MOD6520
      GO TO 20                                                   1MOD6530
100   WRITE (6,520)                                              1MOD6540
      CF=CKDATA(CF)                                              1MOD6550
      GO TO 20                                                   1MOD6560
110   DO 120 I=1,2                                               1MOD6570
      WRITE (6,530) I                                            1MOD6580
      CO(I)=CKDATA(CO(I))                                        1MOD6590
120   CONTINUE                                                   1MOD6600
      GO TO 20                                                   1MOD6610
130   WRITE (6,540) EP,EG,VP,VG                                  1MOD6620
      WRITE (6,550)                                              1MOD6630
      READ (5,*) VAL1,VAL2                                       1MOD6640
      IF (VAL1.NE.0.0) EP=VAL1                                   1MOD6650
      IF (VAL2.NE.0.0) EG=VAL2                                   1MOD6660
      WRITE (6,560)                                              1MOD6670
      READ (5,*) VAL1,VAL2                                       1MOD6680
      IF (VAL1.NE.0.0) VP=VAL1                                   1MOD6690
      IF (VAL1.NE.0.0) VG=VAL2                                   1MOD6700
      AP=(1.-VP**VP)/EP                                          1MOD6710
```

```
      AG=(1.-VG*VG)/EG                                                  1MOD6720
      A=4.*ATAN(1.)*(AP+AG)                                             1MOD6730
      CP=SQRT(1./A)                                                     1MOD6740
      GO TO 20                                                          1MOD6750
  140 DO 150 I=1,2                                                      1MOD6760
      WRITE (6,570) I                                                   1MOD6770
      CL(I)=CKDATA(CL(I))                                               1MOD6780
  150 CONTINUE                                                          1MOD6790
      GO TO 20                                                          1MOD6800
  160 WRITE (6,580)                                                     1MOD6810
      CH=CKDATA(CH)                                                     1MOD6820
      GO TO 20                                                          1MOD6830
  170 WRITE (6,590)                                                     1MOD6840
      CT=CKDATA(CT)                                                     1MOD6850
      GO TO 20                                                          1MOD6860
  180 DO 190 I=1,6                                                      1MOD6870
      WRITE (6,600) I                                                   1MOD6880
      CR(I)=CKDATA(CR(I))                                               1MOD6890
  190 CONTINUE                                                          1MOD6900
      GO TO 20                                                          1MOD6910
  200 DO 210 I=1,6                                                      1MOD6920
      WRITE (6,610) I                                                   1MOD6930
      SAC(I)=CKDATA(SAC(I))                                             1MOD6940
  210 CONTINUE                                                          1MOD6950
      GO TO 20                                                          1MOD6960
  220 WRITE (6,620)                                                     1MOD6970
      AKV=CKDATA(AKV)                                                   1MOD6980
      GO TO 20                                                          1MOD6990
  230 WRITE (6,630)                                                     1MOD7000
      AKS=CKDATA(AKS)                                                   1MOD7010
      GO TO 20                                                          1MOD7020
  240 WRITE (6,640)                                                     1MOD7030
      AKM=CKDATA(AKM)                                                   1MOD7040
      GO TO 20                                                          1MOD7050
  250 DO 260 I=1,2                                                      1MOD7060
      WRITE (6,650) I                                                   1MOD7070
```

```
      AKO(I)=CKDATA(AKO(I))                                              1MOD7080
260   CONTINUE                                                           1MOD7090
      GO TO 20                                                           1MOD7100
270   DO 280 I=1,2                                                       1MOD7110
      WRITE (6,660) I                                                    1MOD7120
      AKL(I)=CKDATA(AKL(I))                                              1MOD7130
280   CONTINUE                                                           1MOD7140
      GO TO 20                                                           1MOD7150
290   WRITE (6,670)                                                      1MOD7160
      AKT=CKDATA(AKT)                                                    1MOD7170
      GO TO 20                                                           1MOD7180
300   DO 310 I=1,6                                                       1MOD7190
      WRITE (6,680) I                                                    1MOD7200
      AKR(I)=CKDATA(AKR(I))                                              1MOD7210
310   CONTINUE                                                           1MOD7220
      GO TO 20                                                           1MOD7230
320   DO 330 I=1,6                                                       1MOD7240
      WRITE (6,690) I                                                    1MOD7250
      SAT(I)=CKDATA(SAT(I))                                              1MOD7260
330   CONTINUE                                                           1MOD7270
      GO TO 20                                                           1MOD7280
C                                                                        1MOD7290
C     FORMAT STATEMENTS                                                  1MOD7300
C                                                                        1MOD7310
C                                                                        1MOD7320
340   FORMAT (1H1,4X,58HTHE FOLLOWING IS A LISTING OF THE PRE-PROGRAMMED1MOD7330
     1 CONSTANTS,/,4X,55HUSED IN THE AGMA FORMULATIONS WITH APPROPRIATE 1MOD7340
     2NOTES ON,/,4X,55HTHEIR APPLICATION.  NOTE: THOSE STARTING WITH A '1MOD7350
     3C' ARE,/,4X,54HDURABILITY CONSTANTS AND THOSE WITH A 'K' ARE STREN1MOD7360
     4GTH,/,4X,56HCONSTANTS.  SERVICE FACTOR APPLIES TO BOTH FORMULATION1MOD7370
     5S.,/)                                                              1MOD7380
350   FORMAT (4X,2HID,4X,5HCONST,4X,8HVALUE(S),3X,5HNOTES,/4X,12H 1   SF1MOD7390
     1(1,1),5X,F4.2,5X,21HSERVICE FACTOR; A1,B1,/4X,12H     SF(1,2),5X,F1MOD7400
     24.2,5X,21H                  A1,B2,/4X,12H     SF(2,1),5X,F4.2,5X,21H1MOD7410
     3                A2,B1,/4X,12H     SF(2,2),5X,F4.2,5X,21H           1MOD7420
     4      A2,B2,/)                                                     1MOD7430
```

```
360   FORMAT (4X,12H 2    CV(1) ,5X,F4.2,5X,18HDYNAMIC FACTOR; C1,/4X,121MOD7440
     1H      CV(2) ,5X,F4.2,5X,18H                  C2,/4X,12H      CV(3) 1MOD7450
     2,5X,F4.2,5X,18H                  C3,//4X,12H 3      CS  ,5X,F4.2,5X,1MOD7460
     311HSIZE FACTOR,//4X,12H 4    CM(1) ,5X,F4.2,5X,28HLOAD DISTRIBUTIO1MOD7470
     4N FACTOR; A1,/4X,12H      CM(2) ,5X,F4.2,5X,28H                     1MOD7480
     5       A2,//4X,12H 5      CF  ,5X,F4.2,5X,24HSURFACE CONDITION FAC1MOD7490
     6TOR,/)                                                              1MOD7500
370   FORMAT (4X,12H 6    CO(1) ,5X,F4.2,5X,19HOVERLOAD FACTOR; A1,/4X,11MOD7510
     12H      CO(2) ,5X,F4.2,5X,19H                  A2,//4X,12H 7      C1MOD7520
     2P  ,4X,F6.1,4X,25HELASTIC PROPERTIES FACTOR,//4X,12H 8    CL(1) ,51MOD7530
     3X,F4.2,5X,15HLIFE FACTOR; A1,/4X,12H      CL(2) ,5X,F4.2,5X,15H   1MOD7540
     4          A2,//4X,12H 9      CH  ,5X,F4.2,5X,21HHARDNESS RATIO FAC1MOD7550
     5TOR,//4X,12H10      CT  ,5X,F4.2,5X,18HTEMPERATURE FACTOR,/)      1MOD7560
380   FORMAT (4X,12H11    CR(1) ,5X,F4.2,5X,22HRELIABILITY FACTOR; D1,/41MOD7570
     1X,12H      CR(2) ,5X,F4.2,5X,22H                  D2,/4X,12H    1MOD7580
     2  CR(3) ,5X,F4.2,5X,22H                  D3,/4X,12H      CR(4) ,1MOD7590
     35X,F4.2,5X,22H                  D4,/4X,12H      CR(5) ,5X,F4.2,51MOD7600
     4X,22H                  D5,/4X,12H      CR(6) ,5X,F4.2,5X,22H    1MOD7610
     5                  D6,/)                                          1MOD7620
390   FORMAT (4X,12H12    SAC(1),4X,F7.0,3X,28HALLOWABLE CONTACT STRESS;1MOD7630
     1 D1,/4X,12H      SAC(2),4X,F7.0,3X,28H                  D21MOD7640
     2,/4X,12H      SAC(3),4X,F7.0,3X,28H                  D3,/41MOD7650
     3X,12H      SAC(4),4X,F7.0,3X,28H                  D4,/4X,11MOD7660
     42H      SAC(5),4X,F7.0,3X,28H                  D5,/4X,12H 1MOD7670
     5     SAC(6),4X,F7.0,3X,28H                  D6,/)          1MOD7680
400   FORMAT (4X,12H13      KV  ,5X,F4.2,5X,14HDYNAMIC FACTOR,//4X,12H141MOD7690
     1      KS  ,5X,F4.2,5X,11HSIZE FACTOR,//4X,12H15      KM  ,5X,F4.2,1MOD7700
     25X,24HLOAD DISTRIBUTION FACTOR,//4X,12H16    KO(1) ,5X,F4.2,5X,19H1MOD7710
     3OVERLOAD FACTOR; E1,/4X,12H      KO(2) ,5X,F4.2,5X,19H             1MOD7720
     4     E2,//4X,12H17    KL(1) ,5X,F4.2,5X,15HLIFE FACTOR; A1,/4X,12H1MOD7730
     5      KL(2) ,5X,F4.2,5X,15H                  A2,/)                 1MOD7740
410   FORMAT (4X,12H18      KT  ,5X,F4.2,5X,18HTEMPERATURE FACTOR,//4X,11MOD7750
     12H19    KR(1) ,5X,F4.2,5X,22HRELIABILITY FACTOR; D1,/4X,12H      K1MOD7760
     2R(2) ,5X,F4.2,5X,22H                  D2,/4X,12H      KR(3) ,5X,1MOD7770
     3F4.2,5X,22H                  D3,/4X,12H      KR(4) ,5X,F4.2,5X,21MOD7780
     42H                  D4,/4X,12H      KR(5) ,5X,F4.2,5X,22H       1MOD7790
```

```
     5              D5,/4X,12H      KR(6) ,5X,F4.2,5X,22H                  1MOD7800
     6    D6,/)                                                            1MOD7810
420   FORMAT (4X,12H20    SAT(1),4X,F6.0,4X,29HALLOWABLE MATERIAL STRESS1MOD7820
     1; D1,/4X,12H      SAT(2),4X,F6.0,4X,29H                            1MOD7830
     2D2,/4X,12H      SAT(3),4X,F6.0,4X,29H                            D31MOD7840
     3,/4X,12H      SAT(4),4X,F6.0,4X,29H                            D4,/1MOD7850
     44X,12H      SAT(5),4X,F6.0,4X,29H                            D5,/4X1MOD7860
     5,12H      SAT(6),4X,F6.0,4X,29H                            D6,/)   1MOD7870
430   FORMAT (5X,38HDEFINITIONS OF CODED NOTES FROM ABOVE:,/6X,45HA1  NA1MOD7880
     1VAL PROFILE - FULL POWER, 5 PERCENT MAX,/6X,36HA2  OTHER - MAXIMUM1MOD7890
     2 LOAD, CONTINUOUS,//6X,35HB1  POWER SOURCE - TURBINE OR MOTOR,/6X,1MOD7900
     345HB2  POWER SOURCE - MULTICYLINDER I. C. ENGINE,//6X,25HC1  FIRST1MOD7910
     4 REDUCTION STAGE,/6X,26HC2  SECOND REDUCTION STAGE,/6X,25HC3  THIR1MOD7920
     5D REDUCTION STAGE,/)                                               1MOD7930
440   FORMAT (6X,33HD1  HARDNESS RANGE: 160 - 200 BHN,/6X,33HD2  HARDNES1MOD7940
     1S RANGE: 200 - 240 BHN,/6X,33HD3  HARDNESS RANGE: 240 - 300 BHN,/61MOD7950
     2X,33HD4  HARDNESS RANGE: 300 - 360 BHN,/6X,33HD5  HARDNESS RANGE: 1MOD7960
     3360 - 400 BHN,/6X,33HD6  HARDNESS RANGE: 400 - 640 BHN,//6X,21HE1 1MOD7970
     4 SINGLE POWER PATH,/6X,21HE2  DOUBLE POWER PATH,//)                1MOD7980
450   FORMAT (4X,58HDO YOU DESIRE TO CHANGE ANY OF THE ABOVE VALUES? (Y 1MOD7990
     1OR N):)                                                            1MOD8000
460   FORMAT (//,4X,61HTO CHANGE A CONSTANT ABOVE, ENTER THE ID NUMBER W1MOD8010
     1HEN PROMTED.,/,4X,56HUSE ID NUMBER 99 WHEN NO FURTHER CHANGES ARE 1MOD8020
     2TO BE MADE.,/,4X,60HNOTE: WHEN ASKED FOR THE NEW VALUE OF THE CONS1MOD8030
     3TANT, ENTERING,/,4X,57HA ZERO WILL CAUSE THE ORIGINAL VALUE TO REM1MOD8040
     4AIN UNCHANGED.,/,4X,59HTHIS IS USEFUL WHEN A CONSTANT HAS MULTIPLE1MOD8050
     5 VALUES, BUT NOT,/,4X,30HALL OF THEM ARE TO BE CHANGED.)           1MOD8060
470   FORMAT (//,4X,51H** ENTER THE CONSTANT ID NUMBER (1-20, 99 TO STOP1MOD8070
     1):)                                                                1MOD8080
480   FORMAT (/,4X,12H** ENTER SF(,I1,1H,,I1,2H):)                        1MOD8090
490   FORMAT (/,4X,12H** ENTER CV(,I1,2H):)                               1MOD8100
500   FORMAT (/,4X,12H** ENTER CS:)                                       1MOD8110
510   FORMAT (/,4X,12H** ENTER CM(,I1,2H):)                               1MOD8120
520   FORMAT (/,4X,12H** ENTER CF:)                                       1MOD8130
530   FORMAT (/,4X,12H** ENTER CO(,I1,2H):)                               1MOD8140
540   FORMAT (/,4X,31HCURRENT YOUNG'S MODULI ARE: EP=,2PE9.1,6H,  EG=,E91MOD8150
```

```
     1.1,/,4X,33HCURRENT POISSON'S RATIOS ARE: VP=,0PF5.3,6H,  VG=,F5.3)1MOD8160
550   FORMAT (/,4X,52H** ENTER YOUNG'S MODULI FOR PINION AND GEAR (EP,EG1MOD8170
     1):)                                                              1MOD8180
560   FORMAT (/,4X,53H** ENTER POISONN'S RATIO FOR PINION AND GEAR (VP,V1MOD8190
     1G):)                                                             1MOD8200
570   FORMAT (/,4X,12H** ENTER CL(,I1,2H):)                           1MOD8210
580   FORMAT (/,4X,12H** ENTER CH:)                                   1MOD8220
590   FORMAT (/,4X,12H** ENTER CT:)                                   1MOD8230
600   FORMAT (/,4X,12H** ENTER CR(,I1,2H):)                           1MOD8240
610   FORMAT (/,4X,13H** ENTER SAC(,I1,2H):)                          1MOD8250
620   FORMAT (/,4X,12H** ENTER KV:)                                   1MOD8260
630   FORMAT (/,4X,12H** ENTER KS:)                                   1MOD8270
640   FORMAT (/,4X,12H** ENTER KM:)                                   1MOD8280
650   FORMAT (/,4X,12H** ENTER KO(,I1,2H):)                           1MOD8290
660   FORMAT (/,4X,12H** ENTER KL(,I1,2H):)                           1MOD8300
670   FORMAT (/,4X,12H** ENTER KT:)                                   1MOD8310
680   FORMAT (/,4X,12H** ENTER KR(,I1,2H):)                           1MOD8320
690   FORMAT (/,4X,13H** ENTER SAT(,I1,2H):)                          1MOD8330
700   FORMAT (1A1)                                                    1MOD8340
      END                                                             1MOD8350
```

```
      SUBROUTINE PRLANL                                                 2MOD0010
C                                                                       2MOD0020
C     CODED BY:  LT J.L. PAQUETTE, USN          JAN 1982              2MOD0030
C                NAVAL POSTGRADUATE SCHOOL  MONTEREY, CA 93940        2MOD0040
C                                                                       2MOD0050
C     SUBPROGRAM TO PERFORM AN ANALYSIS OF A GIVEN PARALLEL             2MOD0060
C     AXIS GEAR SET                                                     2MOD0070
C                                                                       2MOD0080
C     EXTERNAL SUBPROGRAM(S) REQUIRED: SUBROUTINE GFI, SUBROUTINE GFJ,  2MOD0090
C     FUNCTION AGMAE1, FUNCTION ARCCOS, FUNCTION ARCSIN, FUNCTION FALFA,2MOD0100
C     FUNCTION RTFNDR, FUNCTION SHRLD, FUNCTION THICK                   2MOD0110
C                                                                       2MOD0120
      REAL MGOP,MGP                                                     2MOD0130
      COMMON /DESDAT/ PWRIN(2),RPMIN(2),RPMOUT,DHELIX(3),HELIX(3),PD(3),2MOD0140
     1PND(3),DPHI(3),PHI(3),DPHIN(3),PHIN(3),NDIFP,IARR,IEPIC(3),IHARD(32MOD0150
     2,2),IOPRO,NPWRIN,IPWRSR(2),NRED,NPATH,NPLNT(3),NHELX              2MOD0160
      COMMON /DESPRL/ PWRFAC(2,3),MGOP(2),MGP(3,2),RPMP(6,2),PWRP(6,2),D2MOD0170
     1P(3,2),DG(3,2),FACEP(3,2),GEOMI(3,2),GEOMJP(3,2),GEOMJG(3,2),NP(3,2MOD0180
     22),NG(3,2)                                                        2MOD0190
C                                                                       2MOD0200
C     INITIALIZATION                                                    2MOD0210
C                                                                       2MOD0220
      NRED2=NRED*2                                                      2MOD0230
C                                                                       2MOD0240
C     ENTER REQUIRED INFORMATION: DIAMETERS AND FACEWIDTHS              2MOD0250
C                                                                       2MOD0260
      DO 20 J=1,NDIFP                                                   2MOD0270
      DO 20 I=1,NRED                                                    2MOD0280
      WRITE (6,70) I,J                                                  2MOD0290
      IF ((J.EQ.2).AND.(I.EQ.NRED)) GO TO 10                            2MOD0300
      WRITE (6,80)                                                      2MOD0310
      READ (5,*) DP(I,J),DG(I,J)                                        2MOD0320
      MGP(I,J)=DG(I,J)/DP(I,J)                                          2MOD0330
```

```
      NP(I,J)=INT(PD(I)*DP(I,J)+.5)                                    2MOD0340
      NG(I,J)=INT(PD(I)*DG(I,J)+.5)                                    2MOD0350
      WRITE (6,90)                                                     2MOD0360
      READ (5,*) FACEP(I,J)                                            2MOD0370
      GO TO 20                                                         2MOD0380
10    WRITE (6,100)                                                    2MOD0390
      READ (5,*) DP(NRED,2)                                            2MOD0400
      NP(NRED,2)=INT(PD(I)*DP(NRED,2)+.5)                              2MOD0410
      NG(NRED,2)=NG(NRED,1)                                            2MOD0420
      DG(NRED,2)=DG(NRED,1)                                            2MOD0430
      FACEP(NRED,2)=FACEP(NRED,1)                                      2MOD0440
      MGP(NRED,2)=DG(NRED,2)/DP(NRED,2)                                2MOD0450
20    CONTINUE                                                         2MOD0460
C                                                                      2MOD0470
C     COMPUTE RATIOS, SPEED AND POWER SPLITS, AND GEOMETRY FACTORS     2MOD0480
C                                                                      2MOD0490
      DO 30 J=1,NDIFP                                                  2MOD0500
      L=1                                                              2MOD0510
      RPMP(1,J)=RPMIN(J)                                               2MOD0520
      RPMP(2,J)=RPMP(1,J)/MGP(L,J)                                     2MOD0530
      IF (NRED.EQ.1) GO TO 30                                          2MOD0540
      DO 30 I=3,NRED2,2                                                2MOD0550
      L=L+1                                                            2MOD0560
      IM1=I-1                                                          2MOD0570
      IP1=I+1                                                          2MOD0580
      RPMP(I,J)=RPMP(IM1,J)                                            2MOD0590
      RPMP(IP1,J)=RPMP(I,J)/MGP(L,J)                                   2MOD0600
30    CONTINUE                                                         2MOD0610
      DO 50 J=1,NDIFP                                                  2MOD0620
      PWR1=PWRIN(J)                                                    2MOD0630
      L=0                                                              2MOD0640
      DO 40 I=1,NRED2,2                                                2MOD0650
      IP1=I+1                                                          2MOD0660
      L=L+1                                                            2MOD0670
      PWRP(I,J)=PWR1*PWRFAC(NPATH,L)                                   2MOD0680
      PWRP(IP1,J)=PWRP(I,J)/FLOAT(L*NPATH)                             2MOD0690
```

```
40    CONTINUE                                                          2MOD0700
      PWRP(NRED2,J)=PWR1                                                2MOD0710
50    CONTINUE                                                          2MOD0720
      DO 60 J=1,NDIFP                                                   2MOD0730
      MGOP(J)=1.                                                        2MOD0740
      DO 60 I=1,NRED                                                    2MOD0750
      MGOP(J)=MGOP(J)*MGP(I,J)                                          2MOD0760
      CALL GFI  (GEOMI(I,J),I,MGP(I,J),DP(I,J),DG(I,J),0)               2MOD0770
      CALL GFJ  (GEOMJP(I,J),I,DP(I,J),DG(I,J),1,0)                     2MOD0780
      CALL GFJ  (GEOMJG(I,J),I,DP(I,J),DG(I,J),2,0)                     2MOD0790
60    CONTINUE                                                          2MOD0800
      RETURN                                                            2MOD0810
C                                                                       2MOD0820
C     FORMAT STATEMENTS                                                 2MOD0830
C                                                                       2MOD0840
C                                                                       2MOD0850
70    FORMAT (//,4X,54HTHE INFORMATION REQUESTED BELOW IS FOR REDUCTION 2MOD0860
     1STAGE,I2,/,4X,14HIN POWER TRAIN,I2,1H.)                           2MOD0870
80    FORMAT (/,1X,54H** ENTER DIAMETERS OF PINION AND GEAR, INCHES (DP,2MOD0880
     1DG):)                                                             2MOD0890
90    FORMAT (/,1X,40H** ENTER FACEWIDTH OF GEAR PAIR, INCHES:)         2MOD0900
100   FORMAT (/,1X,46H** ENTER ONLY DIAMETER OF PINION, INCHES (DP):)   2MOD0910
      END                                                               2MOD0920
C*****************************************************************     2MOD0930
C     *     *     *     *     *     *     *     *     *     *     *     2MOD0940
C*****************************************************************     2MOD0950
      SUBROUTINE PRLDES                                                 2MOD0960
C                                                                       2MOD0970
C     CODED BY:  LT J.L. PAQUETTE, USN          JAN 1982                2MOD0980
C                NAVAL POSTGRADUATE SCHOOL  MONTEREY, CA 93940          2MOD0990
C                                                                       2MOD1000
C     SUBPROGRAM TO PERFORM DESIGN CALCULATIONS FOR PARALLEL AXIS       2MOD1010
C     REDUCTION GEARS USING A BASIC RANDOM SEARCH OPTIMIZATION          2MOD1020
C     TECHNIQUE TO FIND THE GEAR DIMENSIONS SUBJECT TO SIZE AND         2MOD1030
C     POWER CONSTRAINTS.                                                2MOD1040
C                                                                       2MOD1050
```

```
C     THE VARIABLES ENDING IN A 'Q' ARE LOCAL TO THIS SUBROUTINE AND    2MOD1060
C     REPRESENT THE VALUES OF THE REAL VARIABLE DURING A SPECIFIC       2MOD1070
C     ITERATION.  IF ALL CONSTRAINTS ARE MET (DESIGN IS FEASIBLE) THE   2MOD1080
C     GLOBAL VARIABLES WILL TAKE ON THESE VALUES.                       2MOD1090
C                                                                       2MOD1100
C     EXTERNAL SUBPROGRAM(S) REQUIRED: FUNCTION POWERB, FUNCTION POWERH,2MOD1110
C     SUBROUTINE GFI, SUBROUTINE GFJ, FUNCTION AGMAE1, FUNCTION ARCCOS, 2MOD1120
C     FUNCTION ARCSIN, FUNCTION RTFNDR, FUNCTION FALFA, FUNCTION SHRLD, 2MOD1130
C     FUNCTION THICK, FUNCTION RNDGEN                                   2MOD1140
C                                                                       2MOD1150
      REAL MGOP,MGP,MGO,MGQ,KK                                          2MOD1160
      LOGICAL FLAG,FLAGG                                                2MOD1170
      DIMENSION G(10,3,2),SPDP(3,2),SPDG(3,2),HPP(3,2),HPG(3,2)         2MOD1180
      DIMENSION DPQ(3,2),DGQ(3,2),MGQ(3,2),FACEQ(3,2),SCALE(3)          2MOD1190
      DIMENSION GI(3,2),GJP(3,2),GJG(3,2),REDFAC(3),S(20),IGG(3)        2MOD1200
      COMMON /AGMAB/ SFB(2,2),AKV,AKS,AKM,AKO(2),SAT(6),AKL(2),AKR(6),AK2MOD1210
     1T                                                                 2MOD1220
      COMMON /AGMAH/ SFH(2,2),CV(3),CS,CM(2),CF,CO(2),SAC(6),CP,CL(2),CH2MOD1230
     1,CT,CR(6)                                                         2MOD1240
      COMMON /DESDAT/ PWRIN(2),RPMIN(2),RPMOUT,DHELIX(3),HELIX(3),PD(3),2MOD1250
     1PND(3),DPHI(3),PHI(3),DPHIN(3),PHIN(3),NDIFP,IARR,IEPIC(3),IHARD(32MOD1260
     2,2),IOPRO,NPWRIN,IPWRSR(2),NRED,NPATH,NPLNT(3),NHELX              2MOD1270
      COMMON /DESPRL/ PWRFAC(2,3),MGOP(2),MGP(3,2),RPMP(6,2),PWRP(6,2),D2MOD1280
     1P(3,2),DG(3,2),FACEP(3,2),GEOMI(3,2),GEOMJP(3,2),GEOMJG(3,2),NP(3,2MOD1290
     22),NG(3,2)                                                        2MOD1300
C                                                                       2MOD1310
C     INITIALIZATION                                                    2MOD1320
C                                                                       2MOD1330
      DATA REDFAC/1.2,1.,.83/,IQMAX/7500/,IQ/0/,M/0/,BB/.5/,FDP/1./     2MOD1340
      DATA ALPHA/1./,SCALE/65.,5.,65./,IGG/6,8,10/,FLAG/.FALSE./,IK/0/  2MOD1350
      FOURPI=16.*ATAN(1.)                                               2MOD1360
      LL=NPATH+(NRED-1)*2                                               2MOD1370
      E=1./3.                                                           2MOD1380
      NDV=6*NRED-4                                                      2MOD1390
      NDVP=NRED*NDIFP                                                   2MOD1400
      NDVP3=3*NDVP                                                      2MOD1410
```

```
      MM=10*NDV                                                          2MOD1420
      IF (NHELX.EQ.2)  FDP=2.25                                          2MOD1430
      IF (NHELX.EQ.2)  SCALE(3)=150.                                     2MOD1440
      IRET=1                                                             2MOD1450
      WRITE (6,440)                                                      2MOD1460
      READ (5,*) RND                                                     2MOD1470
C                                                                        2MOD1480
C     COMPUTE THE STAGE GEAR RATIOS FOR THE INITIAL DESIGN               2MOD1490
C                                                                        2MOD1500
      DO 60 J=1,NDIFP                                                    2MOD1510
      MGOP(J)=RPMIN(J)/RPMOUT                                            2MOD1520
      MGO=MGOP(J)                                                        2MOD1530
      GO TO (10,20,30,40,50,50), LL                                      2MOD1540
10    IF ((MGO.LE.1.0).OR.(MGO.GT.10.0)) GO TO 370                       2MOD1550
      MGQ(1,J)=MGO                                                       2MOD1560
      GO TO 60                                                           2MOD1570
20    IF ((MGO.LE.2.24).OR.(MGO.GT.10.0)) GO TO 370                      2MOD1580
      MGQ(1,J)=MGO                                                       2MOD1590
      GO TO 60                                                           2MOD1600
30    IF ((MGO.LE.2.0).OR.(MGO.GT.20.0)) GO TO 370                       2MOD1610
      MGQ(2,J)=SQRT(MGO)-1.                                              2MOD1620
      MGQ(1,J)=MGO/MGQ(2,J)                                              2MOD1630
      GO TO 60                                                           2MOD1640
40    IF ((MGO.LE.2.9).OR.(MGO.GT.48.4)) GO TO 370                       2MOD1650
      MGQ(2,J)=SQRT(MGO)+3.                                              2MOD1660
      MGQ(1,J)=MGO/MGQ(2,J)                                              2MOD1670
      GO TO 60                                                           2MOD1680
50    IF (MGO.LT.5) GO TO 370                                            2MOD1690
      MGQ(2,J)=MGO**E                                                    2MOD1700
      MGQ(3,J)=MGQ(2,J)+3.                                               2MOD1710
      MGQ(1,J)=MGO/(MGQ(2,J)*MGQ(3,J))                                   2MOD1720
60    CONTINUE                                                           2MOD1730
C                                                                        2MOD1740
C     COMPUTE POWER AND SPEED SPLITS FOR THE INITIAL DESIGN              2MOD1750
C                                                                        2MOD1760
      DO 80 J=1,NDIFP                                                    2MOD1770
```

```
      RPM1=RPMIN(J)                                                    2MOD1780
      PWR1=PWRIN(J)                                                    2MOD1790
      DO 70 I=1,NRED                                                   2MOD1800
      SPDP(I,J)=RPM1                                                   2MOD1810
      SPDG(I,J)=RPM1/MGQ(I,J)                                          2MOD1820
      RPM1=SPDG(I,J)                                                   2MOD1830
      HPP(I,J)=PWR1*PWRFAC(NPATH,I)                                    2MOD1840
      HPG(I,J)=PWR1/FLOAT(NPATH*I)                                     2MOD1850
70    CONTINUE                                                         2MOD1860
      HPG(NRED,J)=PWR1                                                 2MOD1870
80    CONTINUE                                                         2MOD1880
C                                                                      2MOD1890
C     ESTIMATE INITIAL DESIGN AS START POINT FOR OPTIMIZATION          2MOD1900
C                                                                      2MOD1910
      DO 90 J=1,NDIFP                                                  2MOD1920
      DO 90 I=1,NRED                                                   2MOD1930
      IH=IHARD(I,1)                                                    2MOD1940
      BRAC=SAC(IH)*1.E-04/CR(IH)                                       2MOD1950
      KK=BRAC*BRAC*REDFAC(I)*2.80/(CO(IOPRO)*CM(IOPRO))                2MOD1960
      ANUM=126050.*HPP(I,J)*(MGQ(I,J)+1.)                              2MOD1970
      DEN=SPDP(I,J)*FDP*KK*MGQ(I,J)                                    2MOD1980
      DPQ(I,J)=(ANUM/DEN)**E                                           2MOD1990
      FACEQ(I,J)=FDP*DPQ(I,J)                                          2MOD2000
90    CONTINUE                                                         2MOD2010
C                                                                      2MOD2020
C     COMPUTE VALUES OF DEPENDENT VARIABLES                            2MOD2030
C                                                                      2MOD2040
100   GO TO (110,120,130), NRED                                        2MOD2050
C ***  SINGLE REDUCTION                                                2MOD2060
110   MGQ(1,1)=MGOP(1)                                                 2MOD2070
      DGQ(1,1)=MGQ(1,1)*DPQ(1,1)                                       2MOD2080
      IF (NDIFP.EQ.1) GO TO 150                                        2MOD2090
      MGQ(1,2)=MGOP(2)                                                 2MOD2100
      DGQ(1,2)=DGQ(1,1)                                                2MOD2110
      DPQ(1,2)=DGQ(1,2)/MGQ(1,2)                                       2MOD2120
      FACEQ(1,2)=FACEQ(1,1)                                            2MOD2130
```

```
      GO TO 150                                                          2MOD2140
C ***** DOUBLE REDUCTION                                                 2MOD2150
120   MGQ(1,1)=MGOP(1)/MGQ(2,1)                                          2MOD2160
      DGQ(1,1)=MGQ(1,1)*DPQ(1,1)                                         2MOD2170
      DGQ(2,1)=MGQ(2,1)*DPQ(2,1)                                         2MOD2180
      IF (NDIFP.EQ.1) GO TO 150                                          2MOD2190
      DGQ(2,2)=DGQ(2,1)                                                  2MOD2200
      MGQ(2,2)=DGQ(2,2)/DPQ(2,2)                                         2MOD2210
      MGQ(1,2)=MGOP(2)/MGQ(2,2)                                          2MOD2220
      DGQ(1,2)=MGQ(1,2)*DPQ(1,2)                                         2MOD2230
      FACEQ(2,2)=FACEQ(1,2)                                              2MOD2240
      GO TO 150                                                          2MOD2250
C ***** TRIPLE REDUCTION                                                 2MOD2260
130   MGQ(1,1)=MGOP(1)/(MGQ(2,1)*MGQ(3,1))                               2MOD2270
      DO 140 I=1,3                                                       2MOD2280
140   DGQ(I,1)=MGQ(I,1)*DPQ(I,1)                                         2MOD2290
      IF (NDIFP.EQ.1) GO TO 150                                          2MOD2300
      DGQ(3,2)=DGQ(3,1)                                                  2MOD2310
      MGQ(3,2)=DGQ(3,2)/DPQ(3,2)                                         2MOD2320
      MGQ(1,2)=MGOP(2)/(MGQ(2,2)*MGQ(3,2))                               2MOD2330
      DGQ(2,2)=MGQ(2,2)*DPQ(2,2)                                         2MOD2340
      DGQ(1,2)=MGQ(1,2)*DPQ(1,2)                                         2MOD2350
      FACEQ(3,2)=FACEQ(3,1)                                              2MOD2360
C                                                                        2MOD2370
C     COMPUTE CONSTRAINTS AND OBJECTIVE FUNCTION                         2MOD2380
C                                                                        2MOD2390
150   VQ=0.0                                                             2MOD2400
      FLAGG=.FALSE.                                                      2MOD2410
      DO 190 J=1,NDIFP                                                   2MOD2420
      DO 190 I=1,NRED                                                    2MOD2430
      CALL GFI (GI(I,J),I,MGQ(I,J),DPQ(I,J),DGQ(I,J),0)                  2MOD2440
      APWRH=POWERH(SPDP(I,J),FACEQ(I,J),DPQ(I,J),I,J,GI(I,J))           2MOD2450
      CALL GFJ (GJP(I,J),I,DPQ(I,J),DGQ(I,J),1,0)                        2MOD2460
      APWRBP=POWERB(SPDP(I,J),FACEQ(I,J),DPQ(I,J),I,J,1,GJP(I,J))       2MOD2470
      CALL GFJ (GJG(I,J),I,DPQ(I,J),DGQ(I,J),2,0)                        2MOD2480
      APWRBG=POWERB(SPDP(I,J),FACEQ(I,J),DPQ(I,J),I,J,2,GJG(I,J))       2MOD2490
```

```
      FLB=FOURPI/(PD(I)*TAN(HELIX(I)))                                  2MOD2500
      IF (FDP.EQ.2.25) FLB=DPQ(I,J)                                     2MOD2510
      FUB=FDP*DPQ(I,J)                                                  2MOD2520
      G(1,I,J)=HPP(I,J)/APWRH-1.0                                       2MOD2530
      G(2,I,J)=HPP(I,J)/APWRBP-1.0                                      2MOD2540
      G(3,I,J)=HPG(I,J)/APWRBG-1.0                                      2MOD2550
      IF ((G(1,I,J).GT.0.).OR.(G(2,I,J).GT.0.).OR.(G(3,I,J).GT.0.)) FLAG2MOD2560
     1G=.TRUE.                                                          2MOD2570
      G(4,I,J)=DGQ(I,J)/200.-1.0                                        2MOD2580
      G(5,I,J)=FLB/FACEQ(I,J)-1.0                                       2MOD2590
      G(6,I,J)=FACEQ(I,J)/FUB-1.0                                       2MOD2600
      GO TO (180,160,170), NRED                                         2MOD2610
160   IF (NPATH.EQ.1) G(7,I,J)=DGQ(1,J)/DGQ(2,J)-1.0                    2MOD2620
      IF (NPATH.EQ.2) G(7,I,J)=MGQ(1,J)/MGQ(2,J)-1.0                    2MOD2630
      G(8,I,J)=DPQ(1,J)/DPQ(2,J)-1.0                                    2MOD2640
      GO TO 180                                                         2MOD2650
170   G(7,I,J)=MGQ(1,J)/MGQ(2,J)-1.0                                    2MOD2660
      G(8,I,J)=MGQ(2,J)/MGQ(3,J)-1.0                                    2MOD2670
      G(9,I,J)=DPQ(1,J)/DPQ(2,J)-1.0                                    2MOD2680
      G(10,I,J)=DPQ(2,J)/DPQ(3,J)-1.0                                   2MOD2690
180   VQ=VQ+.25*(MGQ(I,J)+1.)*(MGQ(I,J)+1.)*DPQ(I,J)*DPQ(I,J)*FACEQ(I,J) 2MOD2700
190   CONTINUE                                                          2MOD2710
C                                                                       2MOD2720
C     CHECK FOR CONSTRAINT VIOLATIONS  (CONSTRAINTS VIOLATED IF AT      2MOD2730
C     LEAST ONE HAS A VALUE GREATER THAN ZERO)                          2MOD2740
C                                                                       2MOD2750
      GMAX=-1.0E+20                                                     2MOD2760
      IG=IGG(NRED)                                                      2MOD2770
      DO 200 K=1,IG                                                     2MOD2780
      DO 200 I=1,NRED                                                   2MOD2790
      DO 200 J=1,NDIFP                                                  2MOD2800
      GMAX=AMAX1(GMAX,G(K,I,J))                                         2MOD2810
200   CONTINUE                                                          2MOD2820
      GO TO (210,300), IRET                                             2MOD2830
C                                                                       2MOD2840
C     SAVE THIS ITERATION'S DESIGN                                      2MOD2850
```

```
C                                                                       2MOD2860
210   GMXSTR=GMAX                                                       2MOD2870
220   FLAG=.FALSE.                                                      2MOD2880
      IF (GMAX.GT.0.0) FLAG=.TRUE.                                      2MOD2890
      VSTR=VQ                                                           2MOD2900
      KS=1                                                              2MOD2910
      DO 230 J=1,NDIFP                                                  2MOD2920
      L=0                                                               2MOD2930
      DO 230 I=1,NRED                                                   2MOD2940
      MGP(I,J)=MGQ(I,J)                                                 2MOD2950
      DP(I,J)=DPQ(I,J)                                                  2MOD2960
      DG(I,J)=DGQ(I,J)                                                  2MOD2970
      FACEP(I,J)=FACEQ(I,J)                                             2MOD2980
      NP(I,J)=INT(DP(I,J)*PD(I)+.5)                                     2MOD2990
      NG(I,J)=INT(DG(I,J)*PD(I)+.5)                                     2MOD3000
      GEOMI(I,J)=GI(I,J)                                                2MOD3010
      GEOMJP(I,J)=GJP(I,J)                                              2MOD3020
      GEOMJG(I,J)=GJG(I,J)                                              2MOD3030
      L=L+1                                                             2MOD3040
      RPMP(L,J)=SPDP(I,J)                                               2MOD3050
      PWRP(L,J)=HPP(I,J)                                                2MOD3060
      L=L+1                                                             2MOD3070
      RPMP(L,J)=SPDG(I,J)                                               2MOD3080
      PWRP(L,J)=HPG(I,J)                                                2MOD3090
230   CONTINUE                                                          2MOD3100
      IF (IRET.EQ.2) GO TO 280                                          2MOD3110
C                                                                       2MOD3120
C     PERFORM LOCAL RANDOM SEARCHES NEAR INITIAL/MOST RECENT DESIGN     2MOD3130
C                                                                       2MOD3140
      IRET=2                                                            2MOD3150
240   M=M+1                                                             2MOD3160
      IF (M.LT.MM) GO TO 250                                            2MOD3170
      ALPHA=BB*ALPHA                                                    2MOD3180
      IF (ALPHA.LT.1.E-04) GO TO 340                                    2MOD3190
      M=0                                                               2MOD3200
250   SMAX=-1.E+10                                                      2MOD3210
```

```
      IS=0                                                          2MOD3220
      DO 260 JJ=1,NDVP                                              2MOD3230
      DO 260 II=1,3                                                 2MOD3240
      IS=IS+1                                                       2MOD3250
      RND=RNDGEN(RND)                                               2MOD3260
      S(IS)=(2.*RND-1.)*SCALE(II)                                   2MOD3270
  260 SMAX=AMAX1(SMAX,ABS(S(IS)))                                   2MOD3280
      DO 270 IS=1,NDVP3                                             2MOD3290
  270 S(IS)=S(IS)/SMAX                                              2MOD3300
      KS=0                                                          2MOD3310
  280 L=0                                                           2MOD3320
      DO 290 JJ=1,NDIFP                                             2MOD3330
      DO 290 II=1,NRED                                              2MOD3340
      L=L+1                                                         2MOD3350
      IF (FLAGG) S(L)=ABS(S(L))                                     2MOD3360
      DPQ(II,JJ)=DP(II,JJ)+ALPHA*S(L)                               2MOD3370
      L=L+1                                                         2MOD3380
      IF (FLAGG) S(L)=ABS(S(L))                                     2MOD3390
      MGQ(II,JJ)=MGP(II,JJ)+ALPHA*S(L)                              2MOD3400
      L=L+1                                                         2MOD3410
  290 FACEQ(II,JJ)=FACEP(II,JJ)+ALPHA*S(L)                          2MOD3420
      GO TO 100                                                     2MOD3430
  300 IQ=IQ+1                                                       2MOD3440
      IF (IQ.GT.IQMAX) GO TO 340                                    2MOD3450
      IF (GMAX.GT.0.0) GO TO 330                                    2MOD3460
      IK=IK+1                                                       2MOD3470
      IF (IK.EQ.1) APLHA=1.0                                        2MOD3480
      IF (VQ.LT.VSTR) GO TO 220                                     2MOD3490
  310 IF (KS.EQ.1) GO TO 240                                        2MOD3500
      DO 320 IS=1,NDVP3                                             2MOD3510
  320 S(IS)=-S(IS)                                                  2MOD3520
      KS=1                                                          2MOD3530
      GO TO 280                                                     2MOD3540
  330 IF (GMAX.GT.GMXSTR) GO TO 310                                 2MOD3550
      GMXSTR=GMAX                                                   2MOD3560
      GO TO 220                                                     2MOD3570
```

```
C                                                                       2MOD3580
C     COMPUTE ACTUAL OVERALL GEAR RATIOS AND SPEEDS TO BE USED          2MOD3590
C                                                                       2MOD3600
340   DO 350 J=1,NDIFP                                                  2MOD3610
      MGOP(J)=1.                                                        2MOD3620
      RPM1=RPMIN(J)                                                     2MOD3630
      L=0                                                               2MOD3640
      DO 350 I=1,NRED                                                   2MOD3650
      MGOP(J)=MGOP(J)*MGP(I,J)                                          2MOD3660
      L=L+1                                                             2MOD3670
      RPMP(L,J)=RPM1                                                    2MOD3680
      L=L+1                                                             2MOD3690
      RPMP(L,J)=RPM1/MGP(I,J)                                           2MOD3700
      RPM1=RPMP(L,J)                                                    2MOD3710
350   CONTINUE                                                          2MOD3720
C                                                                       2MOD3730
C     END OF DESIGN ITERATIONS                                          2MOD3740
C                                                                       2MOD3750
      IF (FLAG) GO TO 360                                               2MOD3760
      RETURN                                                            2MOD3770
C                                                                       2MOD3780
C     ERROR CONDITION HANDLING                                          2MOD3790
C                                                                       2MOD3800
360   WRITE (6,430)                                                     2MOD3810
      RETURN                                                            2MOD3820
370   GO TO (380,390,400,410,420,420), L                                2MOD3830
380   WRITE (6,450) MGO                                                 2MOD3840
      WRITE (6,500)                                                     2MOD3850
      STOP                                                              2MOD3860
390   WRITE (6,460) MGO                                                 2MOD3870
      WRITE (6,500)                                                     2MOD3880
      STOP                                                              2MOD3890
400   WRITE (6,470) MGO                                                 2MOD3900
      WRITE (6,500)                                                     2MOD3910
      STOP                                                              2MOD3920
410   WRITE (6,480) MGO                                                 2MOD3930
```

```
      WRITE (6,500)                                                     2MOD3940
      STOP                                                              2MOD3950
420   WRITE (6,490) MGO                                                 2MOD3960
      WRITE (6,500)                                                     2MOD3970
      STOP                                                              2MOD3980
C                                                                       2MOD3990
C     FORMAT STATEMENTS                                                 2MOD4000
C                                                                       2MOD4010
C                                                                       2MOD4020
430   FORMAT (//,4X,23H****** WARNING ******,/,4X,54HSIZE AND/OR ALLOW2MOD4030
     1ABLE POWER CONSTRAINTS WERE VIOLATED.,/,4X,32HTHIS DESIGN MAY NOT 2MOD4040
     2BE FEASIBLE.,/,4X,34H****** PROGRAM CONTINUING ******,//)        2MOD4050
440   FORMAT (//,2X,49H** ENTER SEED FOR RANDOM NUMBER GENERATOR (X.XX):2MOD4060
     1)                                                                 2MOD4070
450   FORMAT (//,4X,F7.3,48H IS NOT IN THE REQUIRED RANGE OF 1.0 TO 10.02MOD4080
     1 FOR,/,4X,47HSINGLE REDUCTION GEARS WITH SINGLE POWER PATHS.)     2MOD4090
460   FORMAT (//,4X,F7.3,48H IS NOT IN THE REQUIRED RANGE OF 2.2 TO 10.02MOD4100
     1 FOR,/,4X,45HSINGLE REDUCTION GEARS WITH DUAL POWER PATHS.)       2MOD4110
470   FORMAT (//,4X,F7.3,48H IS NOT IN THE REQUIRED RANGE OF 2.0 TO 20.02MOD4120
     1 FOR,/,4X,47HDOUBLE REDUCTION GEARS WITH SINGLE POWER PATHS.)     2MOD4130
480   FORMAT (//,4X,F7.3,48H IS NOT IN THE REQUIRED RANGE OF 2.9 TO 48.42MOD4140
     1 FOR,/,4X,45HDOUBLE REDUCTION GEARS WITH DUAL POWER PATHS.)       2MOD4150
490   FORMAT (//,4X,F7.3,45H IS TOO SMALL FOR AN OVERALL RATIO FOR TRIPL2MOD4160
     1E,/,4X,16HREDUCTION GEARS.)                                       2MOD4170
500   FORMAT (///,5X,63H***** RUN ABORTED BY PROGRAM -- ARRANGEMENT NOT2MOD4180
     1 ALLOWED *****)                                                   2MOD4190
      END                                                               2MOD4200
C*****************************************************************    2MOD4210
C     *     *     *     *     *     *     *     *     *     *     *     2MOD4220
C*****************************************************************    2MOD4230
      SUBROUTINE PRLRES                                                 2MOD4240
C                                                                       2MOD4250
C     CODED BY:  LT J.L. PAQUETTE, USN          JAN 1982                2MOD4260
C                NAVAL POSTGRADUATE SCHOOL  MONTEREY, CA 93940          2MOD4270
C                                                                       2MOD4280
C     SUBPROGRAM TO COMPUTE ALL OUTPUT PARAMETERS FOR PARALLEL          2MOD4290
```

```
C      AXIS GEAR SETS                                                    2MOD4300
C                                                                        2MOD4310
C      EXTERNAL SUBPROGRAM(S) REQUIRED: FUNCTION ARCSIN                  2MOD4320
C                                                                        2MOD4330
       REAL MGOP,MGP,MFP,KFCTRP                                          2MOD4340
       COMMON /AGMAB/ SFB(2,2),AKV,AKS,AKM,AKO(2),SAT(6),AKL(2),AKR(6),AK2MOD4350
      1T                                                                 2MOD4360
       COMMON /AGMAH/ SFH(2,2),CV(3),CS,CM(2),CF,CO(2),SAC(6),CP,CL(2),CH2MOD4370
      1,CT,CR(6)                                                         2MOD4380
       COMMON /DESDAT/ PWRIN(2),RPMIN(2),RPMOUT,DHELIX(3),HELIX(3),PD(3),2MOD4390
      1PND(3),DPHI(3),PHI(3),DPHIN(3),PHIN(3),NDIFP,IARR,IEPIC(3),IHARD(32MOD4400
      2,2),IOPRO,NPWRIN,IPWRSR(2),NRED,NPATH,NPLNT(3),NHELX              2MOD4410
       COMMON /DESPRL/ PWRFAC(2,3),MGOP(2),MGP(3,2),RPMP(6,2),PWRP(6,2),D2MOD4420
      1P(3,2),DG(3,2),FACEP(3,2),GEOMI(3,2),GEOMJP(3,2),GEOMJG(3,2),NP(3,2MOD4430
      22),NG(3,2)                                                        2MOD4440
       COMMON /RESPRL/ PLVP(3,2),FBYDP(3,2),CDP(3,2),WTP(6,2),TLPIP(6,2),2MOD4450
      1UNTLDP(6,2),MFP(3,2),KFCTRP(6,2),SIGHP(3,2),SIGBP(6,2),TORQP(6,2),2MOD4460
      2PDIAMP(6,2),SCDMIN,SCDMAX,SHP,WGHTP,SPCWTP,TRQOUT,MTHP(6,2),ISIZEP2MOD4470
      3(3)                                                               2MOD4480
C                                                                        2MOD4490
C      INITIALIZE                                                        2MOD4500
C                                                                        2MOD4510
       PI=4.*ATAN(1.)                                                    2MOD4520
       L=NPATH+(NRED-1)*2                                                2MOD4530
C                                                                        2MOD4540
C      COMPUTE ALL OUTPUT PARAMETERS                                     2MOD4550
C                                                                        2MOD4560
       SHP=PWRIN(1)+PWRIN(2)                                             2MOD4570
       TRQOUT=63.*SHP/RPMOUT                                             2MOD4580
       DO 10 J=1,NDIFP                                                   2MOD4590
       M=0                                                               2MOD4600
       DO 10 I=1,NRED                                                    2MOD4610
       M=M+1                                                             2MOD4620
       DEN=FACEP(I,J)*DP(I,J)*MGP(I,J)/(MGP(I,J)+1.)                     2MOD4630
       PLVP(I,J)=PI*DP(I,J)*RPMP(M,J)/12.                                2MOD4640
       FBYDP(I,J)=FACEP(I,J)/DP(I,J)                                     2MOD4650
```

```
      CDP(I,J) = (DP(I,J)+DG(I,J))/2.                                    2MOD4660
      MFP(I,J) =NP(I,J)*RPMP(M,J)/60.                                    2MOD4670
      WTP(M,J) = 126050.*PWRP(M,J)/(RPMP(M,J)*DP(I,J))                   2MOD4680
      C1=WTP(M,J)*CO(IOPRO)/CV(I)                                        2MOD4690
      C2=CS/(FACEP(I,J)*DP(I,J))                                         2MOD4700
      C3=CM(IOPRO)*CF/GEOMI(I,J)                                         2MOD4710
      SIGHP(I,J) =CP*SQRT(C1*C2*C3)                                      2MOD4720
      NPTH=NPATH                                                         2MOD4730
      IF ((NRED.EQ.3) .AND. (I.GE.2))  NPTH=2                            2MOD4740
      C1=AKO(NPTH)/AKV                                                   2MOD4750
      C2=PD(I)/FACEP(I,J)                                                2MOD4760
      C3=AKS*AKM                                                         2MOD4770
      SIG=C1*C2*C3                                                       2MOD4780
      SIGBP(M,J) =WTP(M,J)*SIG/GEOMJP(I,J)                               2MOD4790
      TORQP(M,J) =WTP(M,J)*DP(I,J)/2000.                                 2MOD4800
      TLPIP(M,J) =WTP(M,J)/FACEP(I,J)                                    2MOD4810
      UNTLDP(M,J) =TLPIP(M,J)*PND(I)                                     2MOD4820
      KFCTRP(M,J) =WTP(M,J)/DEN                                          2MOD4830
      MTHP(M,J) =NP(I,J)                                                 2MOD4840
      PDIAMP(M,J) =DP(I,J)                                               2MOD4850
      M=M+1                                                              2MOD4860
      WTP(M,J) = 126050.*PWRP(M,J)/(RPMP(M,J)*DG(I,J))                   2MOD4870
      SIGBP(M,J) =WTP(M,J)*SIG/GEOMJG(I,J)                               2MOD4880
      TORQP(M,J) =WTP(M,J)*DG(I,J)/2000.                                 2MOD4890
      TLPIP(M,J) =WTP(M,J)/FACEP(I,J)                                    2MOD4900
      UNTLDP(M,J) =TLPIP(M,J)*PND(I)                                     2MOD4910
      KFCTRP(M,J) =WTP(M,J)/DEN                                          2MOD4920
      MTHP(M,J) =NG(I,J)                                                 2MOD4930
      PDIAMP(M,J) =DG(I,J)                                               2MOD4940
10    CONTINUE                                                           2MOD4950
      IF (NPWRIN.EQ.1) RETURN                                            2MOD4960
C                                                                        2MOD4970
C     COMPUTE SOURCE CENTERLINE DISTANCE LIMITS                          2MOD4980
C       A MINIMUM 12.0 INCH CLEARANCE IS USED BETWEEN EACH POWER         2MOD4990
C       TRAINS' FIRST REDUCTION GEARS' PITCH DIAMETERS.                  2MOD5000
C                                                                        2MOD5010
```

```
      GO TO (20,30,40,50,60,70), L                                      2MOD5020
C ***  SINGLE REDUCTION, SINGLE POWER PATH                              2MOD5030
20    SCDMIN=DP(1,1)/2.+6.                                              2MOD5040
      SCDMAX=SQRT(CDP(1,1)*CDP(1,1)-SCDMIN*SCDMIN)                      2MOD5050
      RETURN                                                            2MOD5060
C ***  SINGLE REDUCTION, DUAL POWER PATH                                2MOD5070
30    A=DP(1,1)/2.+6.                                                   2MOD5080
      A1=ARCSIN(A,CDP(1,1))                                             2MOD5090
      ARG=DP(1,1)/CDP(1,1)                                              2MOD5100
      G1=A1+ATAN(ARG)                                                   2MOD5110
      CSTR=SQRT(CDP(1,1)*CDP(1,1)+DP(1,1)*DP(1,1))                      2MOD5120
      SCDMIN=CSTR*SIN(G1)                                               2MOD5130
      SCDMAX=CSTR*COS(G1)                                               2MOD5140
      RETURN                                                            2MOD5150
C ***  DOUBLE REDUCTION, SINGLE POWER PATH                              2MOD5160
40    SCDMIN=DG(1,1)/2.+6.                                              2MOD5170
      A1=ARCSIN(SCDMIN,CDP(2,1))                                        2MOD5180
      SCDMAX=CDP(1,1)+CDP(2,1)*COS(A1)                                  2MOD5190
      RETURN                                                            2MOD5200
C ***  DOUBLE REDUCTION, DUAL POWER PATH                                2MOD5210
50    A=DG(1,1)/2.+6.                                                   2MOD5220
      A1=ARCSIN(A,CDP(2,1))                                             2MOD5230
      ARG=CDP(1,1)/CDP(2,1)                                             2MOD5240
      G1=A1+ATAN(ARG)                                                   2MOD5250
      CSTR=SQRT(CDP(1,1)*CDP(1,1)+CDP(2,1)*CDP(2,1))                    2MOD5260
      SCDMIN=CSTR*SIN(G1)                                               2MOD5270
      SCDMAX=CSTR*COS(G1)                                               2MOD5280
      IF (G1.GE.ATAN(1.)) SCDMAX=SCDMIN                                 2MOD5290
      RETURN                                                            2MOD5300
C ***  TRIPLE REDUCTION, FIRST RED. HAS SINGLE POWER PATH               2MOD5310
60    A=DP(1,1)/2.+6.                                                   2MOD5320
      B=DG(1,1)/2.+6.                                                   2MOD5330
      B1=ARCSIN(B,CDP(3,1))                                             2MOD5340
      ARG=CDP(2,1)/CDP(3,1)                                             2MOD5350
      G1=B1+ATAN(ARG)                                                   2MOD5360
      CSTR=SQRT(CDP(2,1)*CDP(2,1)+CDP(3,1)*CDP(3,1))                    2MOD5370
```

```
      A1=CSTR*SIN(G1)-CDP(1,1)                                          2MOD5380
      SCDMIN=AMAX1(A1,A)                                                2MOD5390
      SCDMAX=CDP(1,1)+CSTR*COS(G1)                                      2MOD5400
      RETURN                                                            2MOD5410
C *** TRIPLE REDUCTION, FIRST RED. HAS DUAL POWER PATH                  2MOD5420
70    A=AMAX1(DG(2,1),DP(3,1))/2.+6.                                    2MOD5430
      A1=ARCSIN(A,CDP(3,1))                                             2MOD5440
      ARG=CDP(2,1)/CDP(3,1)                                             2MOD5450
      B1=ATAN(ARG)                                                      2MOD5460
      CSTR1=SQRT(CDP(2,1)*CDP(2,1)+CDP(3,1)*CDP(3,1))                   2MOD5470
      ARG=CDP(1,1)/CSTR1                                                2MOD5480
      C1=ATAN(ARG)                                                      2MOD5490
      D1=A1+B1+C1                                                       2MOD5500
      CSTR2=SQRT(CDP(1,1)*CDP(1,1)+CSTR1*CSTR1)                         2MOD5510
      SCDMIN=CSTR2*SIN(D1)                                              2MOD5520
      SCDMAX=CSTR2*COS(D1)                                              2MOD5530
      IF (D1.GE.ATAN(1.)) SCDMAX=SCDMIN                                 2MOD5540
      RETURN                                                            2MOD5550
      END                                                               2MOD5560
C*****************************************************************     2MOD5570
C     *     *     *     *     *     *     *     *     *     *     *     2MOD5580
C*****************************************************************     2MOD5590
      SUBROUTINE PRLSIZ                                                 2MOD5600
C                                                                       2MOD5610
C     CODED BY:  LT J.L. PAQUETTE, USN          JAN 1982                2MOD5620
C                NAVAL POSTGRADUATE SCHOOL  MONTEREY, CA 93940          2MOD5630
C                                                                       2MOD5640
C     SUBPROGRAM TO PROVIDE ESTIMATES ON WEIGHT (LBS) AND DIMENSIONS    2MOD5650
C     (IN) OF PARALLEL AXIS MARINE PROPULSION REDUCTION GEARS           2MOD5660
C        ALL RELATIONS ARE EMPIRICAL AND BASED ON ONLY A LIMITED        2MOD5670
C        NUMBER OF ACTUAL DESIGNS.  OVERALL WEIGHT, NEGLECTING THE      2MOD5680
C        WEIGHT OF AUXILIARY EQUIPMENT, IS BASED ON THE SUM OF ALL      2MOD5690
C        GEAR BLANK VOLUMNS (F*D**D).  OVERALL DIMENSIONS ARE BASED     2MOD5700
C        ON BULL GEAR DIAMETER AND SUM OF EACH REDUCTION STAGE'S        2MOD5710
C        FACEWIDTH.                                                     2MOD5720
C                                                                       2MOD5730
```

```
      REAL MGOP,MGP                                                     2MOD5740
      COMMON /DESDAT/ PWRIN(2),RPMIN(2),RPMOUT,DHELIX(3),HELIX(3),PD(3),2MOD5750
     1PND(3),DPHI(3),PHI(3),DPHIN(3),PHIN(3),NDIFP,IARR,IEPIC(3),IHARD(32MOD5760
     2,2),IOPRO,NPWRIN,IPWRSR(2),NRED,NPATH,NPLNT(3),NHELX              2MOD5770
      COMMON /DESPRL/ PWRFAC(2,3),MGOP(2),MGP(3,2),RPMP(6,2),PWRP(6,2),D2MOD5780
     1P(3,2),DG(3,2),FACEP(3,2),GEOMI(3,2),GEOMJP(3,2),GEOMJG(3,2),NP(3,2MOD5790
     22),NG(3,2)                                                        2MOD5800
      COMMON /RESPRL/ PLVP(3,2),FBYDP(3,2),CDP(3,2),WTP(6,2),TLPIP(6,2),2MOD5810
     1UNTLDP(6,2),MFP(3,2),KFCTRP(6,2),SIGHP(3,2),SIGBP(6,2),TORQP(6,2),2MOD5820
     2PDIAMP(6,2),SCDMIN,SCDMAX,SHP,WGHTP,SPCWTP,TRQOUT,MTHP(6,2),ISIZEP2MOD5830
     3(3)                                                               2MOD5840
C                                                                       2MOD5850
C     INITIALIZATION                                                    2MOD5860
C                                                                       2MOD5870
      D2F=0.0                                                           2MOD5880
      SF=0.0                                                            2MOD5890
      FNP=FLOAT(NPATH)                                                  2MOD5900
C                                                                       2MOD5910
C     COMPUTE WEIGHT ESTIMATE                                           2MOD5920
C                                                                       2MOD5930
      GO TO (10,30,50), NRED                                            2MOD5940
10    DP1=1.                                                            2MOD5950
      IF (NPATH.EQ.2) DP1=3.                                            2MOD5960
      DO 20 J=1,NPWRIN                                                  2MOD5970
20    D2F=D2F+DP1*DP(1,J)*DP(1,J)*FACEP(1,J)                            2MOD5980
      D2F=D2F+DG(1,1)*DG(1,1)*FACEP(1,1)                                2MOD5990
      GO TO 70                                                          2MOD6000
30    DO 40 J=1,NPWRIN                                                  2MOD6010
      D2F1=DP(1,J)*DP(1,J)*FACEP(1,J)                                   2MOD6020
      D2F2=FNP*DG(1,J)*DG(1,J)*FACEP(1,J)                               2MOD6030
      D2F3=FNP*DP(2,J)*DP(2,J)*FACEP(2,J)                               2MOD6040
40    D2F=D2F+D2F1+D2F2+D2F3                                            2MOD6050
      D2F=D2F+DG(2,1)*DG(2,1)*FACEP(2,1)                                2MOD6060
      GO TO 70                                                          2MOD6070
50    DO 60 J=1,NPWRIN                                                  2MOD6080
      D2F1=DP(1,J)*DP(1,J)*FACEP(1,J)                                   2MOD6090
```

```
      D2F2=FNP*DG(1,J)*DG(1,J)*FACEP(1,J)                                2MOD6100
      D2F3=2.*DP(2,J)*DP(2,J)*FACEP(2,J)                                 2MOD6110
      D2F4=4.*DG(2,J)*DG(2,J)*FACEP(2,J)                                 2MOD6120
      D2F5=4.*DP(3,J)*DP(3,J)*FACEP(3,J)                                 2MOD6130
60    D2F=D2F+D2F1+D2F2+D2F3+D2F4+D2F5                                    2MOD6140
      D2F=D2F+DG(3,1)*DG(3,1)*FACEP(3,1)                                 2MOD6150
70    WGHTP=1196.*(D2F)**0.34                                            2MOD6160
      IP=INT(ALOG10(WGHTP))-2                                            2MOD6170
      WGHTP=AINT(WGHTP/(10.**IP))*(10**IP)                               2MOD6180
      SPCWTP=WGHTP/SHP                                                   2MOD6190
C                                                                        2MOD6200
C     DIMENSIONS ESTIMATE                                                2MOD6210
C                                                                        2MOD6220
      DO 80 I=1,NRED                                                     2MOD6230
      IF (NPWRIN.EQ.1) SF=SF+FACEP(I,1)                                  2MOD6240
      IF (NPWRIN.EQ.2) SF=SF+AMAX1(FACEP(I,1),FACEP(I,2))                2MOD6250
80    CONTINUE                                                           2MOD6260
      ISIZEP(1)=INT(2.26*SF+.5)                                          2MOD6270
      ISIZEP(2)=INT(1.28*DG(NRED,1)+.5)                                  2MOD6280
      WC=1.20                                                            2MOD6290
      IF (NPWRIN.EQ.2) WC=1.37                                           2MOD6300
      ISIZEP(3)=INT(WC*DG(NRED,1)+.5)                                    2MOD6310
      RETURN                                                             2MOD6320
      END                                                                2MOD6330
C**********************************************************************2MOD6340
C     *     *     *     *     *     *     *     *     *     *     *     *2MOD6350
C**********************************************************************2MOD6360
      SUBROUTINE PRLOUT                                                  2MOD6370
C                                                                        2MOD6380
C     CODED BY:  LT J.L. PAQUETTE, USN           JAN 1982                2MOD6390
C                NAVAL POSTGRADUATE SCHOOL  MONTEREY, CA 93940           2MOD6400
C                                                                        2MOD6410
C     SUBPROGRAM TO PRESENT ALL RESULTS FROM THE DESIGN/ANALYSIS         2MOD6420
C     FOR PARALLEL AXIS GEARS                                            2MOD6430
C                                                                        2MOD6440
      REAL MGOP,MGP,MFP,KFCTRP                                           2MOD6450
```

```
      DIMENSION KHARD(6,2),MHARD(12)                                    2MOD6460
      COMMON /DESDAT/ PWRIN(2),RPMIN(2),RPMOUT,DHELIX(3),HELIX(3),PD(3),2MOD6470
     1PND(3),DPHI(3),PHI(3),DPHIN(3),PHIN(3),NDIFP,IARR,IEPIC(3),IHARD(32MOD6480
     2,2),IOPRO,NPWRIN,IPWRSR(2),NRED,NPATH,NPLNT(3),NHELX              2MOD6490
      COMMON /DESPRL/ PWRFAC(2,3),MGOP(2),MGP(3,2),RPMP(6,2),PWRP(6,2),D2MOD6500
     1P(3,2),DG(3,2),FACEP(3,2),GEOMI(3,2),GEOMJP(3,2),GEOMJG(3,2),NP(3,2MOD6510
     22),NG(3,2)                                                        2MOD6520
      COMMON /RESPRL/ PLVP(3,2),FBYDP(3,2),CDP(3,2),WTP(6,2),TLPIP(6,2),2MOD6530
     1UNTLDP(6,2),MFP(3,2),KFCTRP(6,2),SIGHP(3,2),SIGBP(6,2),TORQP(6,2),2MOD6540
     2PDIAMP(6,2),SCDMIN,SCDMAX,SHP,WGHTP,SPCWTP,TRQOUT,MTHP(6,2),ISIZEP2MOD6550
     3(3)                                                               2MOD6560
C                                                                       2MOD6570
C     INITIALIZATION                                                    2MOD6580
C                                                                       2MOD6590
      DATA KHARD/160,200,240,300,360,400,200,240,300,360,400,640/,M/0/  2MOD6600
      NRED2=2*NRED                                                      2MOD6610
      NRED4=4*NRED                                                      2MOD6620
      DO 10 II=1,NRED                                                   2MOD6630
      DO 10 JJ=1,2                                                      2MOD6640
      M=M+1                                                             2MOD6650
      I=IHARD(II,JJ)                                                    2MOD6660
      MHARD(M)=KHARD(I,1)                                               2MOD6670
      M=M+1                                                             2MOD6680
10    MHARD(M)=KHARD(I,2)                                               2MOD6690
C                                                                       2MOD6700
C     PRINT OUTPUT                                                      2MOD6710
C                                                                       2MOD6720
      DO 20 J=1,NDIFP                                                   2MOD6730
      WRITE (6,30)                                                      2MOD6740
      IF ((NPWRIN.EQ.2).AND.(NDIFP.EQ.1)) WRITE (6,70)                  2MOD6750
      IF (IPWRSR(J).EQ.1) WRITE (6,40) J                                2MOD6760
      IF (IPWRSR(J).EQ.2) WRITE (6,50) J                                2MOD6770
      WRITE (6,60) PWRIN(J),RPMIN(J)                                    2MOD6780
      WRITE (6,80) NPWRIN,NPATH,NRED                                    2MOD6790
      WRITE (6,90) SHP,RPMOUT,MGOP(J),TRQOUT                            2MOD6800
      IF (NPWRIN.EQ.2) WRITE (6,100) SCDMIN,SCDMAX                      2MOD6810
```

```
      WRITE (6,110) WGHTP,SPCWTP,(ISIZEP(I),I=1,3)                    2MOD6820
      IF (NRED.EQ.1)  WRITE (6,120)                                   2MOD6830
      IF (NRED.EQ.2)  WRITE (6,130)                                   2MOD6840
      IF (NRED.EQ.3)  WRITE (6,140)                                   2MOD6850
      WRITE (6,150)  (PWRP(I,J),I=1,NRED2)                            2MOD6860
      WRITE (6,160)  (RPMP(I,J),I=1,NRED2)                            2MOD6870
      WRITE (6,170)  (MTHP(I,J),I=1,NRED2)                            2MOD6880
      WRITE (6,180)  (PND(I),I=1,NRED)                                2MOD6890
      WRITE (6,190)  (PD(I),I=1,NRED)                                 2MOD6900
      WRITE (6,200)  (DPHIN(I),I=1,NRED)                              2MOD6910
      WRITE (6,210)  (DPHI(I),I=1,NRED)                               2MOD6920
      WRITE (6,220)  (DHELIX(I),I=1,NRED)                             2MOD6930
      WRITE (6,230)  (MGP(I,J),I=1,NRED)                              2MOD6940
      WRITE (6,240)  (PDIAMP(I,J),I=1,NRED2)                          2MOD6950
      WRITE (6,250)  (FACEP(I,J),I=1,NRED)                            2MOD6960
      WRITE (6,260)  (FBYDP(I,J),I=1,NRED)                            2MOD6970
      WRITE (6,270)  (CDP(I,J),I=1,NRED)                              2MOD6980
      WRITE (6,280)  (PLVP(I,J),I=1,NRED)                             2MOD6990
      WRITE (6,290)  (WTP(I,J),I=1,NRED2)                             2MOD7000
      WRITE (6,300)  (TLPIP(I,J),I=1,NRED2)                           2MOD7010
      WRITE (6,310)  (UNTLDP(I,J),I=1,NRED2)                          2MOD7020
      WRITE (6,320)  (MFP(I,J),I=1,NRED)                              2MOD7030
      WRITE (6,330)  (KFCTRP(I,J),I=1,NRED2)                          2MOD7040
      WRITE (6,340)  (SIGHP(I,J),I=1,NRED)                            2MOD7050
      WRITE (6,350)  (SIGBP(I,J),I=1,NRED2)                           2MOD7060
      WRITE (6,360)  (TORQP(I,J),I=1,NRED2)                           2MOD7070
      WRITE (6,370)  (MHARD(I),I=1,NRED4)                             2MOD7080
20    CONTINUE                                                        2MOD7090
      WRITE (6,30)                                                    2MOD7100
      RETURN                                                          2MOD7110
C                                                                     2MOD7120
C     FORMAT STATEMENTS                                               2MOD7130
C                                                                     2MOD7140
C                                                                     2MOD7150
30    FORMAT (/,1X,72(1H*),/)                                         2MOD7160
40    FORMAT (2X,12HPOWER SOURCE,I2,19H:  TURBINE OR MOTOR)           2MOD7170
```

```
50    FORMAT (2X,12HPOWER SOURCE,I2,43H:  MULTICYLINDER INTERNAL COMBUST2MOD7180
     1ION ENGINE)                                                      2MOD7190
60    FORMAT (6X,18HINPUT POWER (HP): ,F7.0,4X,19HINPUT SPEED (RPM): ,F62MOD7200
     1.0,/)                                                            2MOD7210
70    FORMAT (2X,57HNOTE: POWER SOURCES 1 AND 2 ARE IDENTICAL, THEREFORE2MOD7220
     1, THE,/,2X,56HTABULATED INFORMATION BELOW APPLIES TO EACH POWER TR2MOD7230
     2AIN.,/)                                                          2MOD7240
80    FORMAT (2X,27HARRANGEMENT: PARALLEL AXIS,,I2,10H INPUT(S),,I2,15H 2MOD7250
     1POWER PATH(S),,I2,13H REDUCTION(S))                              2MOD7260
90    FORMAT (6X,19HOUTPUT POWER (HP): ,F8.1,3X,20HOUTPUT SPEED (RPM): ,2MOD7270
     1F5.0,/,6X,7HRATIO: ,F6.3,16X,25HOUTPUT TORQUE (K IN-LB): ,F8.1,/) 2MOD7280
100   FORMAT (2X,34HSOURCE CENTER DISTANCE (IN): MIN= ,F5.1,3X,5HMAX= ,F2MOD7290
     15.1,/)                                                           2MOD7300
110   FORMAT (2X,46HSIZING ESTIMATES FOR THE ENTIRE REDUCTION SET:,/,6X,2MOD7310
     113HWEIGHT (LB): ,F7.0,5X,25HSPECIFIC WEIGHT (LB/HP): ,F6.2,/,6X,132MOD7320
     2HLENGTH (IN): ,I3,3X,12HWIDTH (IN): ,I3,3X,13HHEIGHT (IN): ,I3,//)2MOD7330
120   FORMAT (27X,11HREDUCTION 1,/,24X,17H|PINION | GEAR  |,/,24X,1H|,152MOD7340
     1(1H-),1H|)                                                       2MOD7350
130   FORMAT (27X,11HREDUCTION 1,5X,11HREDUCTION 2,/,24X,33H|PINION | GE2MOD7360
     1AR  |PINION | GEAR  |,/,24X,1H|,15(1H-),1H|,15(1H-),1H|)         2MOD7370
140   FORMAT (27X,11HREDUCTION 1,5X,11HREDUCTION 2,5X,11HREDUCTION 3,/,22MOD7380
     14X,49H|PINION | GEAR  |PINION | GEAR  |PINION | GEAR  |,/,24X,1H|,2MOD7390
     215(1H-),1H|,15(1H-),1H|,15(1H-),1H|)                             2MOD7400
150   FORMAT (1X,24HPOWER SPLIT          HP |,6(F7.0,1H|))             2MOD7410
160   FORMAT (1X,24HSPEED               RPM |,3(F6.0,1X,1H|,1X,F6.0,1H|))2MOD7420
170   FORMAT (1X,24HNUMBER OF TEETH         |,6(2X,I4,1X,1H|))         2MOD7430
180   FORMAT (1X,24HNORMAL DIAMETRAL PITCH  |,3(5X,F6.3,4X,1H|))       2MOD7440
190   FORMAT (1X,24HTRANS. DIAMETRAL PITCH  |,3(5X,F6.3,4X,1H|))       2MOD7450
200   FORMAT (1X,24HNORMAL PRESSURE ANGLE   |,3(6X,F4.1,5X,1H|))       2MOD7460
210   FORMAT (1X,24HTRANS. PRESSURE ANGLE   |,3(6X,F4.1,5X,1H|))       2MOD7470
220   FORMAT (1X,24HHELIX ANGLE             |,3(6X,F4.1,5X,1H|))       2MOD7480
230   FORMAT (1X,24HGEAR RATIO              |,3(5X,F6.3,4X,1H|))       2MOD7490
240   FORMAT (1X,24HPITCH DIAMETER      IN |,3(F6.2,1X,1H|,1X,F6.2,1H|))2MOD7500
250   FORMAT (1X,24HEFFECTIVE FACEWIDTH IN |,3(5X,F5.2,5X,1H|))       2MOD7510
260   FORMAT (1X,24HF/DP                    |,3(6X,F4.2,5X,1H|))       2MOD7520
270   FORMAT (1X,24HCENTER DISTANCE     IN |,3(5X,F6.2,4X,1H|))       2MOD7530
```

```
280    FORMAT (1X,24HPITCHLINE VELOCITY FPM |,3(5X,F6.0,4X,1H|))          2MOD7540
290    FORMAT (1X,24HTANGENTIAL LOAD     LB |,3(F6.0,1X,1H|,1X,F6.0,1H|))2MOD7550
300    FORMAT (1X,24HTOOTH LOAD/IN    LB/IN |,6(1X,F5.0,1X,1H|))         2MOD7560
310    FORMAT (1X,24HUNIT LOAD          PSI |,3(F6.0,1X,1H|,1X,F6.0,1H|))2MOD7570
320    FORMAT (1X,24HMESH FREQRENCY      HZ |,3(5X,F6.0,4X,1H|))          2MOD7580
330    FORMAT (1X,24HK FACTOR (COMPUTED)    |,6(1X,F5.0,1X,1H|))         2MOD7590
340    FORMAT (1X,24HCONTACT STRESS     PSI |,3(4X,F7.0,4X,1H|))          2MOD7600
350    FORMAT (1X,24HBENDING STRESS     PSI |,6(F7.0,1H|))                2MOD7610
360    FORMAT (1X,24HTORQUE         K IN-LB |,6(F7.1,1H|))                2MOD7620
370    FORMAT (1X,24HHARDNESS RANGE     BHN |,6(I3,1H-,I3,1H|))           2MOD7630
       END                                                                2MOD7640
```

```
      SUBROUTINE EPCANL                                                 3MOD0010
C                                                                       3MOD0020
C     CODED BY:  LT J.L. PAQUETTE, USN          JAN 1982              3MOD0030
C                NAVAL POSTGRADUATE SCHOOL  MONTEREY, CA 93940        3MOD0040
C                                                                       3MOD0050
C     SUBPROGRAM TO PERFORM AN ANALYSIS OF A GIVEN EPICYCLIC GEAR SET   3MOD0060
C                                                                       3MOD0070
C     EXTERNAL SUBPROGRAM(S) REQUIRED: SUBROUTINE GFI, SUBROUTINE GFJ,  3MOD0080
C     FUNCTION AGMAE1, FUNCTION ARCCOS, FUNCTION ARCSIN, FUNCTION FALFA,3MOD0090
C     FUNCTION RTFNDR, FUNCTION SHRLD, FUNCTION THICK                   3MOD0100
C                                                                       3MOD0110
      REAL MGOE,MGE,MG1                                                 3MOD0120
      COMMON /DESDAT/ PWRIN(2),RPMIN(2),RPMOUT,DHELIX(3),HELIX(3),PD(3),3MOD0130
     1PND(3),DPHI(3),PHI(3),DPHIN(3),PHIN(3),NDIFP,IARR,IEPIC(3),IHARD(33MOD0140
     2,2),IOPRO,NPWRIN,IPWRSR(2),NRED,NPATH,NPLNT(3),NHELX              3MOD0150
      COMMON /DESEPC/ MGOE,MGE(3),RPMI(3),RPMPL(3),RPMO(3),PWRE(3),DS(3)3MOD0160
     1,DPLN(3),DR(3),FACEE(3),GI(3),GJS(3),GJPL(3),NS(3),NPLN(3),NR(3)  3MOD0170
C                                                                       3MOD0180
C     ENTER REQUIRED INFORMATION: TOOTH NUMBERS, DIAMETERS, FACEWIDTHS  3MOD0190
C                                                                       3MOD0200
      DO 10 I=1,NRED                                                    3MOD0210
      WRITE (6,30) I                                                    3MOD0220
      WRITE (6,40)                                                      3MOD0230
      READ (5,*) DS(I),DPLN(I),DR(I)                                    3MOD0240
      WRITE (6,50)                                                      3MOD0250
      READ (5,*) FACEE(I)                                               3MOD0260
10    CONTINUE                                                          3MOD0270
C                                                                       3MOD0280
C     COMPUTE RATIOS, SPEED AND POWER SPLITS, AND GEOMETRY FACTORS      3MOD0290
C                                                                       3MOD0300
      RPM1=RPMIN(1)                                                     3MOD0310
      MGOE=RPMIN(1)/RPMOUT                                              3MOD0320
      DO 20 I=1,NRED                                                    3MOD0330
```

```
      NS(I)=INT(PD(I)*DS(I)+.5)                                          3MOD0340
      NPLN(I)=INT(PD(I)*DPLN(I)+.5)                                      3MOD0350
      NR(I)=INT(PD(I)*DR(I)+.5)                                          3MOD0360
      MGE(I)=DR(I)/DS(I)                                                 3MOD0370
      IF (IEPIC(I).EQ.1)  MGE(I)=MGE(I)+1.                               3MOD0380
      RPMI(I)=RPM1                                                       3MOD0390
      RPMO(I)=RPM1/MGE(I)                                                3MOD0400
      RPM1=RPMO(I)                                                       3MOD0410
      RPMPL(I)=RPM1*DR(I)/DPLN(I)                                        3MOD0420
      PWRE(I)=PWRIN(1)/NPLNT(I)                                          3MOD0430
      MG1=DPLN(I)/DS(I)                                                  3MOD0440
      CALL GFI  (GI(I),I,MG1,DS(I),DPLN(I),0)                            3MOD0450
      CALL GFJ  (GJS(I),I,DS(I),DPLN(I),1,0)                             3MOD0460
      CALL GFJ  (GJPL(I),I,DS(I),DPLN(I),2,0)                            3MOD0470
20    CONTINUE                                                           3MOD0480
      RETURN                                                             3MOD0490
C                                                                        3MOD0500
C     FORMAT STATEMENTS                                                  3MOD0510
C                                                                        3MOD0520
C                                                                        3MOD0530
30    FORMAT (//,4X,54HTHE INFORMATION REQUESTED BELOW IS FOR REDUCTION  3MOD0540
     1STAGE,I2,1H.)                                                      3MOD0550
40    FORMAT (/,1X,61H** ENTER DIAMETERS, IN INCHES, OF SUN, PLANET, AND3MOD0560
     1 RING GEARS,/,1X,18H   (DS, DPLN, DR):)                           3MOD0570
50    FORMAT (/,1X,39H** ENTER FACEWIDTH OF GEARS, IN INCHES:)           3MOD0580
      END                                                                3MOD0590
C*****************************************************************     3MOD0600
C     *     *     *     *     *     *     *     *     *     *     *     3MOD0610
C*****************************************************************     3MOD0620
      SUBROUTINE EPCDES                                                  3MOD0630
C                                                                        3MOD0640
C     CODED BY:  LT J.L. PAQUETTE, USN          JAN 1982                 3MOD0650
C                NAVAL POSTGRADUATE SCHOOL  MONTEREY, CA 93940           3MOD0660
C                                                                        3MOD0670
C     SUBPROGRAM TO PERFORM DESIGN CALCULATIONS FOR EPICYCLIC            3MOD0680
C     REDUCTION GEARS USING A BASIC RANDOM SEARCH OPTIMIZATION           3MOD0690
```

```
C     TECHNIQUE TO FIND THE GEAR DIMENSIONS SUBJECT TO SIZE AND          3MOD0700
C     POWER CONSTRAINTS.                                                 3MOD0710
C                                                                        3MOD0720
C     THE VARIABLES ENDING IN A 'Q' ARE LOCAL TO THIS SUBROUTINE AND     3MOD0730
C     REPRESENT THE VALUES OF THE REAL VARIABLE DURING A SPECIFIC        3MOD0740
C     ITERATION.  IF ALL CONSTRAINTS ARE MET (DESIGN IS FEASIBLE) THE    3MOD0750
C     GLOBAL VARIABLES WILL TAKE ON THESE VALUES.                        3MOD0760
C                                                                        3MOD0770
C     EXTERNAL SUBPROGRAM(S) REQUIRED: FUNCTION POWERB, FUNCTION POWERH,3MOD0780
C     SUBROUTINE GFI, SUBROUTINE GFJ, FUNCTION AGMAE1, FUNCTION ARCCOS,  3MOD0790
C     FUNCTION ARCSIN, FUNCTION RTFNDR, FUNCTION FALFA, FUNCTION SHRLD,  3MOD0800
C     FUNCTION THICK, FUNCTION RNDGEN                                    3MOD0810
C                                                                        3MOD0820
      REAL MGOE,MGE,MG1,MGQ,KK                                           3MOD0830
      LOGICAL FLAG,FLAGG                                                 3MOD0840
      DIMENSION G(9,3),SPD(3),HP(3,2),SCALE(3)                           3MOD0850
      DIMENSION DSQ(3),DRQ(3),DPLNQ(3),MGQ(3),FACEQ(3)                   3MOD0860
      DIMENSION GFIS(3),GFJS(3),GFJP(3),S(10),NSQ(3),NRQ(3),NPLNQ(3)     3MOD0870
      COMMON /AGMAB/ SFB(2,2),AKV,AKS,AKM,AKO(2),SAT(6),AKL(2),AKR(6),AK3MOD0880
     1T                                                                 3MOD0890
      COMMON /AGMAH/ SFH(2,2),CV(3),CS,CM(2),CF,CO(2),SAC(6),CP,CL(2),CH3MOD0900
     1,CT,CR(6)                                                         3MOD0910
      COMMON /DESDAT/ PWRIN(2),RPMIN(2),RPMOUT,DHELIX(3),HELIX(3),PD(3),3MOD0920
     1PND(3),DPHI(3),PHI(3),DPHIN(3),PHIN(3),NDIFP,IARR,IEPIC(3),IHARD(33MOD0930
     2,2),IOPRO,NPWRIN,IPWRSR(2),NRED,NPATH,NPLNT(3),NHELX              3MOD0940
      COMMON /DESEPC/ MGOE,MGE(3),RPMI(3),RPMPL(3),RPMO(3),PWRE(3),DS(3)3MOD0950
     1,DPLN(3),DR(3),FACEE(3),GI(3),GJS(3),GJPL(3),NS(3),NPLN(3),NR(3)  3MOD0960
C                                                                        3MOD0970
C     INITIALIZATION                                                     3MOD0980
C                                                                        3MOD0990
      DATA IQMAX/7500/,IQ/0/,M/0/,BB/.5/,FDP/1./,ALPHA/1./              3MOD1000
      DATA SCALE/30.,5.,30./,FLAG/.FALSE./,IK/0/                         3MOD1010
      FOURPI=16.*ATAN(1.)                                                3MOD1020
      E3=1./3.                                                           3MOD1030
      E=1./FLOAT(NRED)                                                   3MOD1040
      NRED3=3*NRED                                                       3MOD1050
```

```
      NDV=NRED3                                                          3MOD1060
      MM=10*NDV                                                          3MOD1070
      IF (NHELX.EQ.2)  FDP=2.25                                          3MOD1080
      IF (NHELX.EQ.2)  SCALE(3)=75.                                      3MOD1090
      IRET=1                                                             3MOD1100
      WRITE (6,340)                                                      3MOD1110
      READ (5,*) RND                                                     3MOD1120
      RND=RNDGEN(RND)                                                    3MOD1130
C                                                                        3MOD1140
C     COMPUTE THE OVERALL GEAR RATIO, INITIAL STAGE GEAR RATIOS,         3MOD1150
C     AND POWER AND SPEED SPLITS                                         3MOD1160
C                                                                        3MOD1170
      MGOE=RPMIN(1)/RPMOUT                                               3MOD1180
      MGMAX=8.**NRED                                                     3MOD1190
      IF (MGOE.GT.MGMAX) GO TO 320                                       3MOD1200
10    RPM1=RPMIN(1)                                                      3MOD1210
      DO 20 I=1,NRED                                                     3MOD1220
      MGQ(I)=MGOE**E                                                     3MOD1230
      SPD(I)=RPM1                                                        3MOD1240
      RPM1=SPD(I)/MGQ(I)                                                 3MOD1250
      HP(I,1)=PWRIN(1)                                                   3MOD1260
      HP(I,2)=HP(I,1)/NPLNT(I)                                           3MOD1270
20    CONTINUE                                                           3MOD1280
C                                                                        3MOD1290
C     ESTIMATE INITIAL DESIGN AS START POINT FOR OPTIMIZATION            3MOD1300
C                                                                        3MOD1310
      DO 30 I=1,NRED                                                     3MOD1320
      MG1=(1.+RND)*1.5                                                   3MOD1330
      IH=IHARD(I,1)                                                      3MOD1340
      BRAC=SAC(IH)*1.E-04/CR(IH)                                         3MOD1350
      KK=BRAC*BRAC*3.36/(CO(IOPRO)*CM(IOPRO))                            3MOD1360
      ANUM=126050.*HP(I,1)*(MG1+1.)                                      3MOD1370
      DEN=SPD(I)*FDP*KK*MG1                                              3MOD1380
      DSQ(I)=(ANUM/DEN)**E3                                              3MOD1390
      FACEQ(I)=FDP*DSQ(I)                                                3MOD1400
30    CONTINUE                                                           3MOD1410
```

```
C                                                                       3MOD1420
C     COMPUTE VALUES OF DEPENDENT VARIABLES                             3MOD1430
C                                                                       3MOD1440
40    GO TO (50,60,70), NRED                                            3MOD1450
C ***  SINGLE REDUCTION                                                 3MOD1460
50    MGQ(1)=MGOE                                                       3MOD1470
      GO TO 80                                                          3MOD1480
C ***  DOUBLE REDUCTION                                                 3MOD1490
60    MGQ(1)=MGOE/MGQ(2)                                                3MOD1500
      GO TO 80                                                          3MOD1510
C ***  TRIPLE REDUCTION                                                 3MOD1520
70    MGQ(1)=MGOE/(MGQ(2)*MGQ(3))                                       3MOD1530
80    RPM1=RPMIN(1)                                                     3MOD1540
      DO 130 I=1,NRED                                                   3MOD1550
      PNSQ=PD(I)*DSQ(I)                                                 3MOD1560
      NSQ(I)=INT(PNSQ+.5)                                               3MOD1570
      IEP=IEPIC(I)                                                      3MOD1580
      GO TO (90,100), IEP                                               3MOD1590
C ***  PLANETARY GEAR CONFIGURATION                                     3MOD1600
90    PNRQ=FLOAT(NSQ(I))*(MGQ(I)-1.)                                    3MOD1610
      NRQ(I)=INT(PNRQ+.5)                                               3MOD1620
      PKCON=FLOAT(NRQ(I))*MGQ(I)/(FLOAT(NPLNT(I))*(MGQ(I)-1.))         3MOD1630
      KCON=INT(PKCON+.5)                                                3MOD1640
      GO TO 110                                                         3MOD1650
C ***  STAR GEAR ARRANGEMENT                                            3MOD1660
100   PNRQ=FLOAT(NSQ(I))*MGQ(I)                                         3MOD1670
      NRQ(I)=INT(PNRQ+.5)                                               3MOD1680
      PKCON=FLOAT(NRQ(I))*(MGQ(I)+1.)/(MGQ(I)*FLOAT(NPLNT(I)))         3MOD1690
      KCON=INT(PKCON+.5)                                                3MOD1700
110   NRQ(I)=KCON*NPLNT(I)-NSQ(I)                                       3MOD1710
      PLNTQ=(FLOAT(NRQ(I))-FLOAT(NSQ(I)))/2.                            3MOD1720
      IF (PLNTQ.EQ.AINT(PLNTQ)) GO TO 120                               3MOD1730
      KCON=KCON+1                                                       3MOD1740
      GO TO 110                                                         3MOD1750
120   NPLNQ(I)=INT(PLNTQ)                                               3MOD1760
      MGQ(I)=FLOAT(NRQ(I))/FLOAT(NSQ(I))                                3MOD1770
```

```
      IF (IEPIC(I).EQ.1)  MGQ(I)=MGQ(I)+1.                                  3MOD1780
      SPD(I)=RPM1                                                           3MOD1790
      RPM1=SPD(I)/MGQ(I)                                                    3MOD1800
      DPLNQ(I)=FLOAT(NPLNQ(I))/PD(I)                                        3MOD1810
      DRQ(I)=FLOAT(NRQ(I))/PD(I)                                            3MOD1820
130   CONTINUE                                                              3MOD1830
C                                                                           3MOD1840
C     COMPUTE CONSTRAINTS AND OBJECTIVE FUNCTION                            3MOD1850
C                                                                           3MOD1860
      VQ=0.0                                                                3MOD1870
      FLAGG=.FALSE.                                                         3MOD1880
      DO 140 I=1,NRED                                                       3MOD1890
      DPLN7=.7*DPLNQ(I)                                                     3MOD1900
      CALL GFI (GFIS(I),I,MG1,DSQ(I),DPLN7,0)                              3MOD1910
      APWRH=POWERH(SPD(I),FACEQ(I),DSQ(I),I,1,GFIS(I))                     3MOD1920
      CALL GFJ (GFJS(I),I,DSQ(I),DPLN7,1,0)                                3MOD1930
      APWRBP=POWERB(SPD(I),FACEQ(I),DSQ(I),I,1,1,GFJS(I))                  3MOD1940
      CALL GFJ (GFJP(I),I,DSQ(I),DPLN7,2,0)                                3MOD1950
      APWRBG=POWERB(SPD(I),FACEQ(I),DPLN7,I,1,1,GFJP(I))                   3MOD1960
      FLB=FOURPI/(PD(I)*TAN(HELIX(I)))                                      3MOD1970
      IF (FDP.EQ.2.25) FLB=DSQ(I)                                           3MOD1980
      FUB=FDP*DSQ(I)                                                        3MOD1990
      G(1,I)=HP(I,1)/APWRH-1.0                                              3MOD2000
      G(2,I)=HP(I,1)/APWRBP-1.0                                             3MOD2010
      G(3,I)=HP(I,2)/APWRBG-1.0                                             3MOD2020
      IF ((G(1,I).GT.0.).OR.(G(2,I).GT.0.).OR.(G(3,I).GT.0.)) FLAGG=.TRU3MOD2030
     1E.                                                                    3MOD2040
      G(4,I)=DRQ(I)/150.-1.0                                                3MOD2050
      G(5,I)=FLB/FACEQ(I)-1.0                                               3MOD2060
      G(6,I)=FACEQ(I)/FUB-1.0                                               3MOD2070
      G(7,I)=DSQ(I)/DPLNQ(I)-1.0                                            3MOD2080
      G(8,I)=MGQ(I)/8.-1.0                                                  3MOD2090
      G(9,I)=2./MGQ(I)-1.0                                                  3MOD2100
      VQ=VQ+FACEQ(I)*(NPLNT(I)*DPLN(I)*DPLN(I)+DSQ(I)*DSQ(I)+DRQ(I)*DRQ(3MOD2110
     1I))                                                                   3MOD2120
140   CONTINUE                                                              3MOD2130
```

```
C                                                                       3MOD2140
C     CHECK FOR CONSTRAINT VIOLATIONS  (CONSTRAINTS VIOLATED IF AT      3MOD2150
C     LEAST ONE HAS A VALUE GREATER THAN ZERO)                          3MOD2160
C                                                                       3MOD2170
      GMAX=-1.0E+20                                                     3MOD2180
      DO 150 K=1,9                                                      3MOD2190
      DO 150 I=1,NRED                                                   3MOD2200
      GMAX=AMAX1(GMAX,G(K,I))                                           3MOD2210
150   CONTINUE                                                          3MOD2220
      GO TO (160,250), IRET                                             3MOD2230
C                                                                       3MOD2240
C     SAVE THIS ITERATION'S DESIGN                                      3MOD2250
C                                                                       3MOD2260
160   GMXSTR=GMAX                                                       3MOD2270
170   FLAG=.FALSE.                                                      3MOD2280
      IF (GMAX.GT.0.0) FLAG=.TRUE.                                      3MOD2290
      VSTR=VQ                                                           3MOD2300
      KS=1                                                              3MOD2310
      RPM1=RPMIN(1)                                                     3MOD2320
      DO 180 I=1,NRED                                                   3MOD2330
      MGE(I)=MGQ(I)                                                     3MOD2340
      DS(I)=DSQ(I)                                                      3MOD2350
      DPLN(I)=DPLNQ(I)                                                  3MOD2360
      DR(I)=DRQ(I)                                                      3MOD2370
      FACEE(I)=FACEQ(I)                                                 3MOD2380
      NS(I)=NSQ(I)                                                      3MOD2390
      NPLN(I)=NPLNQ(I)                                                  3MOD2400
      NR(I)=NRQ(I)                                                      3MOD2410
      GI(I)=GFIS(I)                                                     3MOD2420
      GJS(I)=GFJS(I)                                                    3MOD2430
      GJPL(I)=GFJP(I)                                                   3MOD2440
      RPMI(I)=RPM1                                                      3MOD2450
      RPMO(I)=RPM1/MGE(I)                                               3MOD2460
      RPM1=RPMO(I)                                                      3MOD2470
      RPMPL(I)=RPM1*DR(I)/DPLN(I)                                       3MOD2480
      PWRE(I)=HP(I,2)                                                   3MOD2490
```

```
180   CONTINUE                                                          3MOD2500
      IF (IRET.EQ.2) GO TO 230                                          3MOD2510
C                                                                       3MOD2520
C     PERFORM LOCAL RANDOM SEARCHES NEAR INITIAL/MOST RECENT DESIGN     3MOD2530
C                                                                       3MOD2540
      IRET=2                                                            3MOD2550
190   M=M+1                                                             3MOD2560
      IF (M.LT.MM) GO TO 200                                            3MOD2570
      ALPHA=BB*ALPHA                                                    3MOD2580
      IF (ALPHA.LT.1.E-04) GO TO 290                                    3MOD2590
      M=0                                                               3MOD2600
200   SMAX=-1.E+10                                                      3MOD2610
      IS=0                                                              3MOD2620
      DO 210 JJ=1,NRED                                                  3MOD2630
      DO 210 II=1,3                                                     3MOD2640
      IS=IS+1                                                           3MOD2650
      RND=RNDGEN(RND)                                                   3MOD2660
      S(IS)=(2.*RND-1.)*SCALE(II)                                       3MOD2670
210   SMAX=AMAX1(SMAX,ABS(S(IS)))                                       3MOD2680
      DO 220 IS=1,NRED3                                                 3MOD2690
220   S(IS)=S(IS)/SMAX                                                  3MOD2700
      KS=0                                                              3MOD2710
230   L=0                                                               3MOD2720
      DO 240 II=1,NRED                                                  3MOD2730
      L=L+1                                                             3MOD2740
      IF (FLAGG) S(L)=ABS(S(L))                                         3MOD2750
      DSQ(II)=DS(II)+ALPHA*S(L)                                         3MOD2760
      L=L+1                                                             3MOD2770
C     IF(FLAGG) S(L)=ABS(S(L))                                          3MOD2780
      MGQ(II)=MGE(II)+ALPHA*S(L)                                        3MOD2790
      L=L+1                                                             3MOD2800
240   FACEQ(II)=FACEE(II)+ALPHA*S(L)                                    3MOD2810
      GO TO 40                                                          3MOD2820
250   IQ=IQ+1                                                           3MOD2830
      IF (IQ.GT.IQMAX) GO TO 290                                        3MOD2840
      IF (GMAX.GT.0.0) GO TO 280                                        3MOD2850
```

```
      IK=IK+1                                                          3MOD2860
      IF (IK.EQ.1) APLHA=1.0                                           3MOD2870
      IF (VQ.LT.VSTR) GO TO 170                                        3MOD2880
260   IF (KS.EQ.1) GO TO 190                                           3MOD2890
      DO 270 IS=1,NRED3                                                3MOD2900
270   S(IS)=-S(IS)                                                     3MOD2910
      KS=1                                                             3MOD2920
      GO TO 230                                                        3MOD2930
280   IF (GMAX.GT.GMXSTR) GO TO 260                                    3MOD2940
      GMXSTR=GMAX                                                      3MOD2950
      GO TO 170                                                        3MOD2960
C                                                                      3MOD2970
C     COMPUTE ACTUAL OVERALL GEAR RATIOS AND SPEEDS TO BE USED         3MOD2980
C                                                                      3MOD2990
290   MGOE=1.                                                          3MOD3000
      DO 300 I=1,NRED                                                  3MOD3010
300   MGOE=MGOE*MGE(I)                                                 3MOD3020
C                                                                      3MOD3030
C     END OF DESIGN ITERATIONS                                         3MOD3040
C                                                                      3MOD3050
      IF (FLAG) GO TO 310                                              3MOD3060
      RETURN                                                           3MOD3070
C                                                                      3MOD3080
C     ERROR CONDITION HANDLING                                         3MOD3090
C                                                                      3MOD3100
310   WRITE (6,330)                                                    3MOD3110
      RETURN                                                           3MOD3120
320   NP1=NRED+1                                                       3MOD3130
      WRITE (6,350) MGOE,NRED,NP1                                      3MOD3140
      NRED=NP1                                                         3MOD3150
      GO TO 10                                                         3MOD3160
C                                                                      3MOD3170
C     FORMAT STATEMENTS                                                3MOD3180
C                                                                      3MOD3190
C                                                                      3MOD3200
330   FORMAT (//,4X,23H******  WARNING  ******,/,4X,54HSIZE AND/OR ALLOW3MOD3210
```

```
     1ABLE POWER CONSTRAINTS WERE VIOLATED.,/,4X,32HTHIS DESIGN MAY NOT 3MOD3220
     2BE FEASIBLE.,/,4X,34H******  PROGRAM CONTINUING  ******,//)       3MOD3230
340   FORMAT (//,2X,49H** ENTER SEED FOR RANDOM NUMBER GENERATOR (X.XX):3MOD3240
     1)                                                                 3MOD3250
350   FORMAT (//,4X,28HTHE OVERALL REDUCTION RATIO,,F7.3,17H, IS TO LARG3MOD3260
     1E FOR,I2,/,4X,30HREDUCTION STAGE(S); THEREFORE,,I2,33H REDUCTION S3MOD3270
     2TAGE(S) WILL BE USED.)                                            3MOD3280
      END                                                               3MOD3290
C*****************************************************************     3MOD3300
C    *    *    *    *    *    *    *    *    *    *    *    *    *     3MOD3310
C*****************************************************************     3MOD3320
      SUBROUTINE EPCRES                                                 3MOD3330
C                                                                       3MOD3340
C     CODED BY:  LT J.L. PAQUETTE, USN            JAN 1982              3MOD3350
C                NAVAL POSTGRADUATE SCHOOL  MONTEREY, CA 93940          3MOD3360
C                                                                       3MOD3370
C     SUBPROGRAM TO COMPUTE ALL OUTPUT PARAMETERS FOR EPICYCLIC GEARS   3MOD3380
C                                                                       3MOD3390
      REAL MGOE,MGE,MFE,KFCTRE,MG1                                      3MOD3400
      COMMON /AGMAB/ SFB(2,2),AKV,AKS,AKM,AKO(2),SAT(6),AKL(2),AKR(6),AK3MOD3410
     1T                                                                 3MOD3420
      COMMON /AGMAH/ SFH(2,2),CV(3),CS,CM(2),CF,CO(2),SAC(6),CP,CL(2),CH3MOD3430
     1,CT,CR(6)                                                         3MOD3440
      COMMON /DESDAT/ PWRIN(2),RPMIN(2),RPMOUT,DHELIX(3),HELIX(3),PD(3),3MOD3450
     1PND(3),DPHI(3),PHI(3),DPHIN(3),PHIN(3),NDIFP,IARR,IEPIC(3),IHARD(33MOD3460
     2,2),IOPRO,NPWRIN,IPWRSR(2),NRED,NPATH,NPLNT(3),NHELX              3MOD3470
      COMMON /DESEPC/ MGOE,MGE(3),RPMI(3),RPMPL(3),RPMO(3),PWRE(3),DS(3)3MOD3480
     1,DPLN(3),DR(3),FACEE(3),GI(3),GJS(3),GJPL(3),NS(3),NPLN(3),NR(3)  3MOD3490
      COMMON /RESEPC/ PLVE(3),FBYDE(3),CDE(3),WTE(3),TLPIE(3),UNTLDE(3),3MOD3500
     1MFE(3,3),KFCTRE(3),SIGHE(3),SIGBE(3),TORQE(3,3),RPME(3,3),PDIAME(33MOD3510
     2,3),WGHTE,SPCWTE,MTHE(3,3),ISIZEE(3)                              3MOD3520
C                                                                       3MOD3530
C     INITIALIZE                                                        3MOD3540
C                                                                       3MOD3550
      PI=4.*ATAN(1.)                                                    3MOD3560
C                                                                       3MOD3570
```

```
C     COMPUTE ALL OUTPUT PARAMETERS                                    3MOD3580
C                                                                      3MOD3590
      DO 40 I=1,NRED                                                   3MOD3600
      PLVE(I)=PI*DS(I)*RPMI(I)/12.                                     3MOD3610
      FBYDE(I)=FACEE(I)/DS(I)                                          3MOD3620
      CDE(I)=(DS(I)+DPLN(I))/2.                                        3MOD3630
      WTE(I)=126050.*PWRIN(1)/(RPMI(I)*DS(I))                          3MOD3640
      TLPIE(I)=WTE(I)/FACEE(I)                                         3MOD3650
      UNTLDE(I)=TLPIE(I)*PND(I)                                        3MOD3660
      ANPLNT=FLOAT(NPLNT(I))                                           3MOD3670
      ANR=FLOAT(NR(I))                                                 3MOD3680
      ANPLN=FLOAT(NPLN(I))                                             3MOD3690
      ANS=FLOAT(NS(I))                                                 3MOD3700
      IE=IEPIC(I)                                                      3MOD3710
      GO TO (10,20), IE                                                3MOD3720
10    ANRPNS=ANR+ANS                                                   3MOD3730
      MFE(I,1)=ANPLNT*ANR*RPMI(I)/ANRPNS                               3MOD3740
      MFE(I,2)=(ANR/ANPLN)*ANS*RPMI(I)/ANRPNS                          3MOD3750
      MFE(I,3)=ANPLNT*ANS*RPMI(I)/ANRPNS                               3MOD3760
      GO TO 30                                                         3MOD3770
20    MFE(I,1)=ANPLNT*RPMI(I)                                          3MOD3780
      MFE(I,2)=2.*ANS*RPMI(I)/ANPLN                                    3MOD3790
      MFE(I,3)=ANPLNT*ANS*RPMI(I)/ANR                                  3MOD3800
30    MG1=DPLN(I)/DS(I)                                                3MOD3810
      KFCTRE(I)=WTE(I)*(MG1+1.)/(FACEE(I)*DS(I)*MG1)                   3MOD3820
      C1=WTE(I)*CO(IOPRO)/CV(1)                                        3MOD3830
      C2=CS/(DS(I)*FACEE(I))                                           3MOD3840
      C3=CM(IOPRO)*CF/GI(I)                                            3MOD3850
      SIGHE(I)=CP*SQRT(C1*C2*C3)                                       3MOD3860
      C1=WTE(I)*AKO(2)/AKV                                             3MOD3870
      C2=PD(I)/FACEE(I)                                                3MOD3880
      C3=AKS*AKM/AMIN1(GJS(I),GJPL(I))                                 3MOD3890
      SIGBE(I)=C1*C2*C3                                                3MOD3900
      TW=WTE(I)/2000.                                                  3MOD3910
      TORQE(I,1)=TW*DS(I)                                              3MOD3920
      TORQE(I,2)=TW*DPLN(I)                                            3MOD3930
```

```
      TORQE(I,3)=63.*PWRIN(1)/RPMO(I)                                   3MOD3940
      RPME(I,1)=RPMI(I)                                                 3MOD3950
      RPME(I,2)=RPMPL(I)                                                3MOD3960
      RPME(I,3)=RPMO(I)                                                 3MOD3970
      MTHE(I,1)=NS(I)                                                   3MOD3980
      MTHE(I,2)=NPLN(I)                                                 3MOD3990
      MTHE(I,3)=NR(I)                                                   3MOD4000
      PDIAME(I,1)=DS(I)                                                 3MOD4010
      PDIAME(I,2)=DPLN(I)                                               3MOD4020
      PDIAME(I,3)=DR(I)                                                 3MOD4030
40    CONTINUE                                                          3MOD4040
      RETURN                                                            3MOD4050
      END                                                               3MOD4060
C*****************************************************************     3MOD4070
C     *     *     *     *     *     *     *     *     *     *     *     3MOD4080
C*****************************************************************     3MOD4090
      SUBROUTINE EPCSIZ                                                 3MOD4100
C                                                                       3MOD4110
C     CODED BY:  LT J.L. PAQUETTE, USN          JAN 1982                3MOD4120
C                NAVAL POSTGRADUATE SCHOOL  MONTEREY, CA 93940          3MOD4130
C                                                                       3MOD4140
C     SUBPROGRAM TO PROVIDE ESTIMATES ON WEIGHT (LBS) AND DIMENSIONS    3MOD4150
C     (IN) OF EPICYCLIC MARINE PROPULSION REDUCTION GEARS               3MOD4160
C        ALL RELATIONS ARE EMPIRICAL AND BASED ON ONLY A LIMITED        3MOD4170
C        NUMBER OF ACTUAL DESIGNS.  OVERALL WEIGHT, NEGLECTING THE      3MOD4180
C        WEIGHT OF AUXILIARY EQUIPMENT, IS BASED ON THE SUM OF ALL      3MOD4190
C        GEAR BLANK VOLUMNS (F*D**D).  OVERALL DIMENSIONS ARE BASED     3MOD4200
C        ON RING GEAR DIAMETER AND SUM OF EACH REDUCTION STAGE'S        3MOD4210
C        FACEWIDTH.                                                     3MOD4220
C                                                                       3MOD4230
      REAL MGOE,MGE,MFE,KFCTRE                                          3MOD4240
      COMMON /DESDAT/ PWRIN(2),RPMIN(2),RPMOUT,DHELIX(3),HELIX(3),PD(3),3MOD4250
     1PND(3),DPHI(3),PHI(3),DPHIN(3),PHIN(3),NDIFP,IARR,IEPIC(3),IHARD(33MOD4260
     2,2),IOPRO,NPWRIN,IPWRSR(2),NRED,NPATH,NPLNT(3),NHELX              3MOD4270
      COMMON /DESEPC/ MGOE,MGE(3),RPMI(3),RPMPL(3),RPMO(3),PWRE(3),DS(3)3MOD4280
     1,DPLN(3),DR(3),FACEE(3),GI(3),GJS(3),GJPL(3),NS(3),NPLN(3),NR(3)  3MOD4290
```

```
      COMMON /RESEPC/ PLVE(3),FBYDE(3),CDE(3),WTE(3),TLPIE(3),UNTLDE(3),3MOD4300
     1MFE(3,3),KFCTRE(3),SIGHE(3),SIGBE(3),TORQE(3,3),RPME(3,3),PDIAME(33MOD4310
     2,3),WGHTE,SPCWTE,MTHE(3,3),ISIZEE(3)                              3MOD4320
C                                                                       3MOD4330
C     INITIALIZATION                                                    3MOD4340
C                                                                       3MOD4350
      D2F=0.0                                                           3MOD4360
      SF=0.0                                                            3MOD4370
      FNP=FLOAT(NPATH)                                                  3MOD4380
      DRMAX=-1.E-04                                                     3MOD4390
C                                                                       3MOD4400
C     COMPUTE WEIGHT ESTIMATE                                           3MOD4410
C                                                                       3MOD4420
      DO 10 I=1,NRED                                                    3MOD4430
      DRMAX=AMAX1(DRMAX,DR(I))                                          3MOD4440
      SF=SF+FACEE(I)                                                    3MOD4450
      D2F1=DS(I)*DS(I)*FACEE(I)                                         3MOD4460
      D2F2=NPLNT(I)*DPLN(I)*DPLN(I)*FACEE(I)                            3MOD4470
C ***** USE 0.7 DR TO ACCOUNT FOR THE CARRIER                          3MOD4480
      D2F3=.49*DR(I)*DR(I)*FACEE(I)                                     3MOD4490
10    D2F=D2F+D2F1+D2F2+D2F3                                            3MOD4500
      WGHTE=.905*(D2F)**0.89                                            3MOD4510
      IP=INT(ALOG10(WGHTE))-2                                           3MOD4520
      WGHTE=AINT(WGHTE/(10.**IP))*(10**IP)                              3MOD4530
      SPCWTE=WGHTE/PWRIN(1)                                             3MOD4540
C                                                                       3MOD4550
C     DIMENSIONS ESTIMATE                                               3MOD4560
C                                                                       3MOD4570
      ISIZEE(1)=INT(2.85*SF+.5)                                         3MOD4580
      ISIZEE(2)=INT(1.30*DRMAX+.5)                                      3MOD4590
      ISIZEE(3)=INT(1.20*DRMAX+.5)                                      3MOD4600
      RETURN                                                            3MOD4610
      END                                                               3MOD4620
C*****************************************************************3MOD4630
C     *     *     *     *     *     *     *     *     *     *     *     3MOD4640
C*****************************************************************3MOD4650
```

```
      SUBROUTINE EPCOUT                                                 3MOD4660
C                                                                       3MOD4670
C     CODED BY:  LT J.L. PAQUETTE, USN           JAN 1982             3MOD4680
C                NAVAL POSTGRADUATE SCHOOL  MONTEREY, CA 93940        3MOD4690
C                                                                       3MOD4700
C     SUBPROGRAM TO PRESENT ALL RESULTS FROM THE DESIGN/ANALYSIS        3MOD4710
C     FOR EPICYCLIC GEARS                                               3MOD4720
C                                                                       3MOD4730
      REAL MGOE,MGE,MFE,KFCTRE                                          3MOD4740
      DIMENSION KHARD(6,2),MHARD(4)                                     3MOD4750
      COMMON /DESDAT/ PWRIN(2),RPMIN(2),RPMOUT,DHELIX(3),HELIX(3),PD(3),3MOD4760
     1PND(3),DPHI(3),PHI(3),DPHIN(3),PHIN(3),NDIFP,IARR,IEPIC(3),IHARD(33MOD4770
     2,2),IOPRO,NPWRIN,IPWRSR(2),NRED,NPATH,NPLNT(3),NHELX              3MOD4780
      COMMON /DESEPC/ MGOE,MGE(3),RPMI(3),RPMPL(3),RPMO(3),PWRE(3),DS(3)3MOD4790
     1,DPLN(3),DR(3),FACEE(3),GI(3),GJS(3),GJPL(3),NS(3),NPLN(3),NR(3)  3MOD4800
      COMMON /RESEPC/ PLVE(3),FBYDE(3),CDE(3),WTE(3),TLPIE(3),UNTLDE(3),3MOD4810
     1MFE(3,3),KFCTRE(3),SIGHE(3),SIGBE(3),TORQE(3,3),RPME(3,3),PDIAME(33MOD4820
     2,3),WGHTE,SPCWTE,MTHE(3,3),ISIZEE(3)                              3MOD4830
C                                                                       3MOD4840
C     INITIALIZATION                                                    3MOD4850
C                                                                       3MOD4860
      DATA KHARD/160,200,240,300,360,400,200,240,300,360,400,640/       3MOD4870
C                                                                       3MOD4880
C     PRINT OUTPUT                                                      3MOD4890
C                                                                       3MOD4900
      WRITE (6,30)                                                      3MOD4910
      IF (IPWRSR(1).EQ.1) WRITE (6,40)                                  3MOD4920
      IF (IPWRSR(1).EQ.2) WRITE (6,50)                                  3MOD4930
      WRITE (6,60) PWRIN(1),RPMIN(1)                                    3MOD4940
      WRITE (6,70) NRED                                                 3MOD4950
      WRITE (6,80) PWRIN(1),RPMOUT,MGOE,TORQE(NRED,3)                   3MOD4960
      WRITE (6,90) WGHTE,SPCWTE,(ISIZEE(I),I=1,3)                       3MOD4970
      DO 20 I=1,NRED                                                    3MOD4980
      WRITE (6,30)                                                      3MOD4990
      M=0                                                               3MOD5000
      DO 10 J=1,2                                                       3MOD5010
```

```
      IH=IHARD(I,J)                                                    3MOD5020
      M=M+1                                                            3MOD5030
      MHARD(M)=KHARD(IH,1)                                             3MOD5040
      M=M+1                                                            3MOD5050
10    MHARD(M)=KHARD(IH,2)                                             3MOD5060
      WRITE (6,100) I                                                  3MOD5070
      IF (IEPIC(I).EQ.1) WRITE (6,110)                                 3MOD5080
      IF (IEPIC(I).EQ.2) WRITE (6,120)                                 3MOD5090
      WRITE (6,130) NPLNT(I)                                           3MOD5100
      WRITE (6,140) PWRIN(1),PWRE(I),PWRIN(1)                          3MOD5110
      WRITE (6,150) (RPME(I,J),J=1,3)                                  3MOD5120
      WRITE (6,160) (MTHE(I,J),J=1,3)                                  3MOD5130
      WRITE (6,170) PND(I)                                             3MOD5140
      WRITE (6,180) PD(I)                                              3MOD5150
      WRITE (6,190) DPHIN(I)                                           3MOD5160
      WRITE (6,200) DPHI(I)                                            3MOD5170
      WRITE (6,210) DHELIX(I)                                          3MOD5180
      WRITE (6,220) MGE(I)                                             3MOD5190
      WRITE (6,230) (PDIAME(I,J),J=1,3)                                3MOD5200
      WRITE (6,240) FACEE(I)                                           3MOD5210
      WRITE (6,250) FBYDE(I)                                           3MOD5220
      WRITE (6,260) CDE(I)                                             3MOD5230
      WRITE (6,270) PLVE(I)                                            3MOD5240
      WRITE (6,280) WTE(I)                                             3MOD5250
      WRITE (6,290) TLPIE(I)                                           3MOD5260
      WRITE (6,300) UNTLDE(I)                                          3MOD5270
      WRITE (6,310) (MFE(I,J),J=1,3)                                   3MOD5280
      WRITE (6,320) KFCTRE(I)                                          3MOD5290
      WRITE (6,330) SIGHE(I)                                           3MOD5300
      WRITE (6,340) SIGBE(I)                                           3MOD5310
      WRITE (6,350) (TORQE(I,J),J=1,3)                                 3MOD5320
      WRITE (6,360) (MHARD(J),J=1,2),(MHARD(J),J=1,4)                  3MOD5330
20    CONTINUE                                                         3MOD5340
      WRITE (6,30)                                                     3MOD5350
      RETURN                                                           3MOD5360
C                                                                      3MOD5370
```

```
C     FORMAT STATEMENTS                                                    3MOD5380
C                                                                          3MOD5390
C                                                                          3MOD5400
30    FORMAT (//,1X,72(1H*),/)                                             3MOD5410
40    FORMAT (2X,31HPOWER SOURCE:  TURBINE OR MOTOR)                       3MOD5420
50    FORMAT (2X,55HPOWER SOURCE:  MULTICYLINDER INTERNAL COMBUSTION ENG3MOD5430
     1INE)                                                                3MOD5440
60    FORMAT (6X,18HINPUT POWER (HP): ,F7.0,4X,19HINPUT SPEED (RPM): ,F63MOD5450
     1.0,/)                                                               3MOD5460
70    FORMAT (2X,23HARRANGEMENT: EPICYCLIC,,I2,13H REDUCTION(S))           3MOD5470
80    FORMAT (6X,19HOUTPUT POWER (HP): ,F7.0,3X,20HOUTPUT SPEED (RPM): ,3MOD5480
     1F5.0,/,6X,7HRATIO: ,F6.3,16X,25HOUTPUT TORQUE (K IN-LB): ,F8.1,/)   3MOD5490
90    FORMAT (2X,46HSIZING ESTIMATES FOR THE ENTIRE REDUCTION SET:,/,6X,3MOD5500
     113HWEIGHT (LB): ,F7.0,5X,25HSPECIFIC WEIGHT (LB/HP): ,F6.2,/,6X,133MOD5510
     2HLENGTH (IN): ,I3,3X,12HWIDTH (IN): ,I3,3X,13HHEIGHT (IN): ,I3,//)3MOD5520
100   FORMAT (43X,9HREDUCTION,I2,/,24X,1H|,6X,3HSUN,6X,1H|,4X,7HPLANETS,3MOD5530
     14X,1H|,3X,9HRING-CAGE,3X,1H|,/,24X,1H|,15(1H-),1H|,15(1H-),1H|,15(3MOD5540
     21H-),1H|)                                                           3MOD5550
110   FORMAT (1X,24HGEAR ARRANGEMENT        |,19X,9HPLANETARY,19X,1H|)    3MOD5560
120   FORMAT (1X,24HGEAR ARRANGEMENT        |,22X,4HSTAR,21X,1H|)         3MOD5570
130   FORMAT (1X,24HNUMBER OF PLANETS       |,23X,I1,23X,1H|)             3MOD5580
140   FORMAT (1X,24HPOWER SPLIT          HP |,3(4X,F7.0,4X,1H|))         3MOD5590
150   FORMAT (1X,24HSPEED               RPM |,3(4X,F7.0,4X,1H|))         3MOD5600
160   FORMAT (1X,24HNUMBER OF TEETH         |,3(6X,I4,5X,1H|))           3MOD5610
170   FORMAT (1X,24HNORMAL DIAMETRAL PITCH  |,20X,F6.3,21X,1H|)          3MOD5620
180   FORMAT (1X,24HTRANS. DIAMETRAL PITCH  |,20X,F6.3,21X,1H|)          3MOD5630
190   FORMAT (1X,24HNORMAL PRESSURE ANGLE   |,21X,F4.1,22X,1H|)          3MOD5640
200   FORMAT (1X,24HTRANS. PRESSURE ANGLE   |,21X,F4.1,22X,1H|)          3MOD5650
210   FORMAT (1X,24HHELIX ANGLE             |,21X,F4.1,22X,1H|)          3MOD5660
220   FORMAT (1X,24HGEAR RATIO              |,20X,F6.3,21X,1H|)          3MOD5670
230   FORMAT (1X,24HPITCH DIAMETER       IN |,3(4X,F6.2,5X,1H|))         3MOD5680
240   FORMAT (1X,24HEFFECTIVE FACEWIDTH  IN |,21X,F5.2,21X,1H|)          3MOD5690
250   FORMAT (1X,24HF/DP                    |,21X,F4.2,22X,1H|)          3MOD5700
260   FORMAT (1X,24HCENTER DISTANCE      IN |,20X,F6.2,21X,1H|)          3MOD5710
270   FORMAT (1X,24HPITCHLINE VELOCITY FPM |,20X,F6.0,21X,1H|)          3MOD5720
280   FORMAT (1X,24HTANGENTIAL LOAD      LB |,20X,F6.0,21X,1H|)          3MOD5730
```

```
290    FORMAT (1X,24HTOOTH LOAD/IN    LB/IN |,21X,F5.0,21X,1H|)            3MOD5740
300    FORMAT (1X,24HUNIT LOAD          PSI |,20X,F6.0,21X,1H|)            3MOD5750
310    FORMAT (1X,24HMESH FREQRENCY      HZ |,3(4X,F6.0,5X,1H|))           3MOD5760
320    FORMAT (1X,24HK FACTOR (COMPUTED)    |,21X,F5.0,21X,1H|)            3MOD5770
330    FORMAT (1X,24HCONTACT STRESS     PSI |,20X,F7.0,20X,1H|)            3MOD5780
340    FORMAT (1X,24HBENDING STRESS     PSI |,20X,F7.0,20X,1H|)            3MOD5790
350    FORMAT (1X,24HTORQUE         K IN-LB |,3(4X,F7.1,4X,1H|))           3MOD5800
360    FORMAT (1X,24HHARDNESS RANGE     BHN |,3(2X,I3,5H  -  ,I3,2X,1H|)) 3MOD5810
       END                                                                 3MOD5820
```

```
      FUNCTION AGMAE1 (PHIN,II)                                          4MOD0010
C                                                                        4MOD0020
C     CODED BY:  LT J.L. PAQUETTE, USN           JAN 1982              4MOD0030
C                NAVAL POSTGRADUATE SCHOOL  MONTEREY, CA 93940         4MOD0040
C                                                                        4MOD0050
C     SUBPROGRAM TO PROVIDE INTERPOLATION OF TABLE E-1 IN                4MOD0060
C     AGMA 226.01, AUG 1970 FOR VALUES OF H, L, AND M USED               4MOD0070
C     TO COMPUTE KF -- LAGRANGE INTERPOLATION USED                       4MOD0080
C                                                                        4MOD0090
C     PHIN    NORMAL PRESSURE ANGLE IN RADIANS                           4MOD0100
C     II=1    INTERPOLATION OF H -- F(1)  TO F(3)                        4MOD0110
C     II=2    INTERPOLATION OF L -- F(4)  TO F(6)                        4MOD0120
C     II=3    INTERPOLATION OF M -- F(7)  TO F(9)                        4MOD0130
C                                                                        4MOD0140
      DIMENSION F(9),A(3)                                                4MOD0150
C                                                                        4MOD0160
C     INITIALIZATION:                                                    4MOD0170
C     ARRAY F CONTAINS THE VALUES OF H, L, M FROM TABLE E-1              4MOD0180
C                                                                        4MOD0190
      DATA F/0.22,0.18,0.14,0.20,0.15,0.11,0.40,0.45,0.50/               4MOD0200
      SUM=0.0                                                            4MOD0210
      L=0                                                                4MOD0220
C                                                                        4MOD0230
C     CONVERT PHIN TO DEGREES FOR USE IN INTERPOLATION                   4MOD0240
C                                                                        4MOD0250
      X=PHIN*180./(4.*ATAN(1.))                                          4MOD0260
      A(1)=(X-20.)*(X-25.)/57.75                                         4MOD0270
      A(2)=(X-14.5)*(X-25.)/(-27.5)                                      4MOD0280
      A(3)=(X-14.5)*(X-20.)/52.5                                         4MOD0290
      I=(II-1)*3+1                                                       4MOD0300
      J=3*II                                                             4MOD0310
      DO 10 K=I,J                                                        4MOD0320
      L=L+1                                                              4MOD0330
```

```
10      SUM=SUM+A(L)*F(K)                                                  4MOD0340
        AGMAE1=SUM                                                         4MOD0350
        RETURN                                                             4MOD0360
        END                                                                4MOD0370
C*******************************************************************      4MOD0380
C     *     *     *     *     *     *     *     *     *     *     *     *  4MOD0390
C*******************************************************************      4MOD0400
        FUNCTION ARCCOS (A,B)                                              4MOD0410
        RATIO=A/B                                                          4MOD0420
        ARG=SQRT(1.-RATIO*RATIO)/RATIO                                     4MOD0430
        ARCCOS=ATAN(ARG)                                                   4MOD0440
        RETURN                                                             4MOD0450
        END                                                                4MOD0460
C*******************************************************************      4MOD0470
C     *     *     *     *     *     *     *     *     *     *     *     *  4MOD0480
C*******************************************************************      4MOD0490
        FUNCTION ARCSIN (A,B)                                              4MOD0500
        RATIO=A/B                                                          4MOD0510
        ARG=RATIO/SQRT(1.-RATIO*RATIO)                                     4MOD0520
        ARCSIN=ATAN(ARG)                                                   4MOD0530
        RETURN                                                             4MOD0540
        END                                                                4MOD0550
C*******************************************************************      4MOD0560
C     *     *     *     *     *     *     *     *     *     *     *     *  4MOD0570
C*******************************************************************      4MOD0580
        FUNCTION CKDATA (A)                                                4MOD0590
C                                                                          4MOD0600
C       CODED BY:  LT J.L. PAQUETTE, USN            JAN 1982               4MOD0610
C                  NAVAL POSTGRADUATE SCHOOL  MONTEREY, CA 93940           4MOD0620
C                                                                          4MOD0630
C       SUBPROGRAM USED BY SUBROUTINE AGMA TO CHECK AND/OR MODIFY THE      4MOD0640
C       PRE-PROGRAMMED AGMA CONSTANTS -- A VALUE  OF ZERO (VAL=0.0) WILL   4MOD0650
C       CAUSE THE PRE-PROGRAMMED CONSTANT TO REMAIN UNCHANGED.             4MOD0660
C                                                                          4MOD0670
        READ (5,*) VAL                                                     4MOD0680
        IF (VAL.NE.0.0) GO TO 10                                           4MOD0690
```

```
      CKDATA=A                                                          4MOD0700
      RETURN                                                            4MOD0710
10    CKDATA=VAL                                                        4MOD0720
      RETURN                                                            4MOD0730
      END                                                               4MOD0740
C*****************************************************************     4MOD0750
C     *     *     *     *     *     *     *     *     *     *     *     4MOD0760
C*****************************************************************     4MOD0770
      FUNCTION FALFA (X,CNST)                                           4MOD0780
C                                                                       4MOD0790
C     CODED BY:  LT J.L. PAQUETTE, USN           JAN 1982               4MOD0800
C                NAVAL POSTGRADUATE SCHOOL  MONTEREY, CA 93940          4MOD0810
C                                                                       4MOD0820
C     SUBPROGRAM TO EVALUATE THE FUNCTION OF ALPHA FROM THE             4MOD0830
C     GEOMETRY OF THE TOOTH LAYOUT                                      4MOD0840
C                                                                       4MOD0850
C     X      VARIABLE REPRESENTING ALPHA                                4MOD0860
C     CNST   PARAMETER LIST OF CONSTANTS IN F(ALPHA)                    4MOD0870
C            CNST(1)=XC    X-COORD OF ROOT FILLET CENTER                4MOD0880
C            CNST(2)=YC    Y-COORD OF ROOT FILLET CENTER                4MOD0890
C            CNST(3)=RF    ROOT FILLET RADIUS                           4MOD0900
C            CNST(4)=RV    RADIUS TO TIP OF STRESS PARABOLA             4MOD0910
C            CNST(5)=GII   0 FOR EXTERNAL GEARS; 1 FOR INTERNAL GEARS   4MOD0920
C                                                                       4MOD0930
      DIMENSION CNST(5)                                                 4MOD0940
      XC=CNST(1)                                                        4MOD0950
      YC=CNST(2)                                                        4MOD0960
      RF=CNST(3)                                                        4MOD0970
      RV=CNST(4)                                                        4MOD0980
      GII=CNST(5)                                                       4MOD0990
      CONST=RV-YC                                                       4MOD1000
      IF (GII.EQ.1.0) CONST=-CONST                                      4MOD1010
      FALFA=XC-RF*COS(X)-2.*TAN(X)*(CONST+RF*SIN(X))                    4MOD1020
      RETURN                                                            4MOD1030
      END                                                               4MOD1040
C*****************************************************************     4MOD1050
```

```
C     *     *     *     *     *     *     *     *     *     *     *     *     *     *  4MOD1060
C*****************************************************************************************4MOD1070
      SUBROUTINE GFI (GEOMI,IRED,MG,DP,DG,III)                                          4MOD1080
C                                                                                       4MOD1090
C     CODED BY:  LT J.L. PAQUETTE, USN              JAN 1982                            4MOD1100
C                NAVAL POSTGRADUATE SCHOOL  MONTEREY, CA 93940                        4MOD1110
C                                                                                       4MOD1120
C     SUBPROGRAM TO COMPUTE THE DURABILITY GEOMETRY FACTOR, I                           4MOD1130
C                                                                                       4MOD1140
C     OUTPUT VARIABLE:                                                                  4MOD1150
C     GEOMI  DURABILITY GEOMETRY FACTOR                                                 4MOD1160
C                                                                                       4MOD1170
C     INPUT VARIABLES:                                                                  4MOD1180
C     IRED   REDUCTION STAGE UNDER CONSIDERATION                                        4MOD1190
C     MG     REDUCTION RATIO  (MG .GT. 1.0)                                             4MOD1200
C     DP     DIAMETER OF THE PINION                                                     4MOD1210
C     DG     DIAMETER OF THE GEAR                                                       4MOD1220
C     III    0 FOR EXTERNAL GEARS; 1 FOR INTERNAL GEARS                                 4MOD1230
C                                                                                       4MOD1240
C     EXTERNAL SUBPROGRAM(S) REQUIRED: FUNCTION SHRLD                                   4MOD1250
C                                                                                       4MOD1260
      REAL MG                                                                           4MOD1270
      COMMON /DESDAT/ PWRIN(2),RPMIN(2),RPMOUT,DHELIX(3),HELIX(3),PD(3),4MOD1280
     1PND(3),DPHI(3),PHI(3),DPHIN(3),PHIN(3),NDIFP,IARR,IEPIC(3),IHARD(34MOD1290
     2,2),IOPRO,NPWRIN,IPWRSR(2),NRED,NPATH,NPLNT(3),NHELX                              4MOD1300
      RATIO=MG/(MG+1.)                                                                  4MOD1310
      IF (III.EQ.1) RATIO=MG/(MG-1.)                                                    4MOD1320
      TWOMN=2.*SHRLD(IRED,DP,DG)                                                        4MOD1330
      GEOMI=SIN(PHI(IRED))*COS(PHI(IRED))*RATIO/TWOMN                                   4MOD1340
      RETURN                                                                            4MOD1350
      END                                                                               4MOD1360
C*****************************************************************************************4MOD1370
C     *     *     *     *     *     *     *     *     *     *     *     *     *     *  4MOD1380
C*****************************************************************************************4MOD1390
      SUBROUTINE GFJ (GEOMJ,IRED,DP,DG,IPG,III)                                         4MOD1400
C                                                                                       4MOD1410
```

```
C     CODED BY:  LT J.L. PAQUETTE, USN           JAN 1982                  4MOD1420
C                NAVAL POSTGRADUATE SCHOOL  MONTEREY, CA 93940            4MOD1430
C                                                                         4MOD1440
C     SUBPROGRAM TO COMPUTE THE STRENGTH GEOMETRY FACTOR, J,              4MOD1450
C     IAW AGMA 226.01, AUG 1970 -- ALL CALCULATIONS ARE BASED             4MOD1460
C     ON ACTUAL GEOMETRY WITH NO REQUIREMENT TO SCALE THE                 4MOD1470
C     PROBLEM TO A NORMAL DIAMETRAL PITCH OF ONE (PND=1).                 4MOD1480
C     THE AGMA TOOTH FORM FACTOR, BASED ON A SCALE OF PND=1,              4MOD1490
C     HAS BEEN APPROPRIATELY MODIFIED.                                    4MOD1500
C                                                                         4MOD1510
C     OUTPUT VARIABLE:                                                    4MOD1520
C     GEOMJ  STRENGTH GEOMETRY FACTOR                                     4MOD1530
C                                                                         4MOD1540
C     INPUT VARIABLES:                                                    4MOD1550
C     IRED   REDUCTION STAGE UNDER CONSIDERATION                          4MOD1560
C     DP     DIAMETER OF THE PINION                                       4MOD1570
C     DG     DIAMETER OF THE GEAR                                         4MOD1580
C     IPG    GEAR FOR WHICH GEOMJ IS COMPUTED:                            4MOD1590
C              IPG=1  GEOMJ FOR PINION                                    4MOD1600
C              IPG=2  GEOMJ FOR GEAR                                      4MOD1610
C     III    0 FOR EXTERNAL GEARS; 1 FOR INTERNAL GEARS                   4MOD1620
C                                                                         4MOD1630
C     EXTERNAL SUBPROGRAM(S) REQUIRED: FUNCTION AGMAE1, FUNCTION ARCCOS,4MOD1640
C        FUNCTION ARCSIN, FUNCTION FALFA, FUNCTION RTFNDR, FUNCTION       4MOD1650
C        SHRLD, FUNCTION THICK                                            4MOD1660
C                                                                         4MOD1670
      REAL INV,KF,MN                                                      4MOD1680
      DIMENSION CNST(5)                                                   4MOD1690
      COMMON /DESDAT/ PWRIN(2),RPMIN(2),RPMOUT,DHELIX(3),HELIX(3),PD(3),4MOD1700
     1PND(3),DPHI(3),PHI(3),DPHIN(3),PHIN(3),NDIFP,IARR,IEPIC(3),IHARD(34MOD1710
     2,2),IOPRO,NPWRIN,IPWRSR(2),NRED,NPATH,NPLNT(3),NHELX                4MOD1720
      EXTERNAL FALFA                                                      4MOD1730
      INV(Z)=TAN(Z)-Z                                                     4MOD1740
C                                                                         4MOD1750
C     INITIALIZATION                                                      4MOD1760
C                                                                         4MOD1770
```

```
      IF (IPG.EQ.1) III=0                                                4MOD1780
      PI=4.*ATAN(1.)                                                     4MOD1790
      D=DP                                                               4MOD1800
      IF (IPG.EQ.2) D=DG                                                 4MOD1810
C                                                                        4MOD1820
C     A=ADDENDUM; B=DEDENDUM; TT=ARC THICKNESS OF THE TOOTH              4MOD1830
C     AT THE PITCH DIAMETER, D                                           4MOD1840
C                                                                        4MOD1850
      A=1./PD(IRED)                                                      4MOD1860
      B=1.25/PD(IRED)                                                    4MOD1870
      TT=PI*COS(HELIX(IRED))/(2.*PD(IRED))                               4MOD1880
C                                                                        4MOD1890
C     RF=ROOT FILLET RADIUS; RT=RADIUS OF TIP OF GENERATING TOOL         4MOD1900
C     (ASSUME AVERAGE VALUE OF 0.28/PND FOR RT)                          4MOD1910
C                                                                        4MOD1920
      RT=.28/PND(IRED)                                                   4MOD1930
      BMRT=B-RT                                                          4MOD1940
      RF=RT+BMRT*BMRT/(D/(2.*COS(HELIX(IRED))*COS(HELIX(IRED)))+BMRT)    4MOD1950
C                                                                        4MOD1960
C     D=PITCH DIAMETER; DR=ROOT DIAMETER; DO=OUTSIDE DIAMETER;           4MOD1970
C     DB=BASE DIAMETER; DI=INSIDE DIAMETER (INTERNAL GEARS ONLY)         4MOD1980
C                                                                        4MOD1990
      DR=D-2.*B                                                          4MOD2000
      DO=D+2.*A                                                          4MOD2010
      DB=D*COS(PHI(IRED))                                                4MOD2020
      DI=D-2.*A                                                          4MOD2030
C                                                                        4MOD2040
C     TC=CHORDAL THICKNESS OF THE TOOTH AT THE PITCH DIAMETER;           4MOD2050
C     EPS=ANGLE FROM THE CENTERLINE OF THE TOOTH TO A POINT WHERE        4MOD2060
C     THE INVOLUTE CURVE CROSSES THE BASE CIRCLE; TTIP=THICKNESS         4MOD2070
C     OF THE TOOTH AT ITS TIP                                            4MOD2080
C                                                                        4MOD2090
      TC=TT-(TT*TT*TT*COS(HELIX(IRED))*COS(HELIX(IRED))/(6.*D*D))        4MOD2100
      EPS=INV(PHI(IRED))+ARCSIN(TC,D)                                    4MOD2110
      IF (III.EQ.1) EPS=ARCSIN(TC,D)-INV(PHI(IRED))                      4MOD2120
      DTIP=DO                                                            4MOD2130
```

```
      IF (III.EQ.1) DTIP=DI                                          4MOD2140
      TTIP=THICK(D,DB,DTIP,TT,III)                                   4MOD2150
C                                                                    4MOD2160
C     PHILN=NORMAL LOAD PRESSURE ANGLE AT THE TIP OF THE TOOTH;      4MOD2170
C     RV=RADIUS TO THE TIP OF THE STRESS PARABOLA ON THE TOOTH       4MOD2180
C     CENTERLINE; XC=X-COORD OF THE CENTER OF THE ROOT FILLET;       4MOD2190
C     YC=Y-COORD OF THE CENTER OF THE ROOT FILLET (BOTH WITH         4MOD2200
C     RESPECT TO THE TOOTH CENTERLINE)                               4MOD2210
C                                                                    4MOD2220
      PHILN=ARCCOS(DB,DTIP)-(TTIP/DTIP)                              4MOD2230
      IF (III.EQ.1) PHILN=ARCCOS(DB,DTIP)+(TTIP/DTIP)                4MOD2240
      RV=DB/(2.*COS(PHILN))                                          4MOD2250
C                                                                    4MOD2260
C     COMPUTE XC AND YC                                              4MOD2270
C                                                                    4MOD2280
      HYP=(DR/2.)+RF                                                 4MOD2290
      RB=DB/2.                                                       4MOD2300
      IF (HYP-RB) 10,20,20                                           4MOD2310
10    XC=RF+HYP*SIN(EPS)                                             4MOD2320
      YC=SQRT(HYP*HYP-XC*XC)                                         4MOD2330
      GO TO 30                                                       4MOD2340
20    PHI1=ARCCOS(RB,HYP)                                            4MOD2350
      OPP1=HYP*SIN(PHI1)                                             4MOD2360
      OPP2=OPP1-RF                                                   4MOD2370
      HYP1=SQRT(OPP2*OPP2+RB*RB)                                     4MOD2380
      PHI2=ARCCOS(RB,HYP1)                                           4MOD2390
      DELTA=EPS+PHI1-PHI2-INV(PHI2)                                  4MOD2400
      IF (III.EQ.1) DELTA=EPS+PHI1-PHI2+INV(PHI2)                    4MOD2410
      XC=HYP*SIN(DELTA)                                              4MOD2420
      YC=HYP*COS(DELTA)                                              4MOD2430
C                                                                    4MOD2440
C     SOLVE FOR THE ANGLE ALPHA USED TO COMPUTE VALUES OF T, H,      4MOD2450
C     AND X WHICH ARE 'COMPUTED MEASUREMENTS' FROM THE TOOTH         4MOD2460
C     LAYOUT (NOTE: T=2*CAPT)                                        4MOD2470
C     ARRAY CNST IS A PARAMETER LIST OF CONSTANTS REQUIRED FOR       4MOD2480
C     THE EVALUATION OF THE FUNCTION OF ALPHA                        4MOD2490
```

```
C                                                                       4MOD2500
30      CNST(1)=XC                                                      4MOD2510
        CNST(2)=YC                                                      4MOD2520
        CNST(3)=RF                                                      4MOD2530
        CNST(4)=RV                                                      4MOD2540
        CNST(5)=FLOAT(III)                                              4MOD2550
        ALPHA=RTFNDR(0.,0.7,FALFA,CNST,0.0001)                          4MOD2560
        CAPT=XC-RF*COS(ALPHA)                                           4MOD2570
        T=2.*CAPT                                                       4MOD2580
        H=RV-YC+RF*SIN(ALPHA)                                           4MOD2590
        IF (III.EQ.1) H=YC-RV+RF*SIN(ALPHA)                             4MOD2600
        ARG=H/CAPT                                                      4MOD2610
        GAMMA1=(PI/2.)-ATAN(ARG)                                        4MOD2620
        X=CAPT*TAN(GAMMA1)                                              4MOD2630
C                                                                       4MOD2640
C       CSMH=AGMA HELICAL FACTOR; ANU=ARGUMENT FOR CSMH IN DEGREES      4MOD2650
C       AND DIVIDED BY 100                                              4MOD2660
C                                                                       4MOD2670
        ARG=TAN(HELIX(IRED))*SIN(PHIN(IRED))                            4MOD2680
        ANU=ATAN(ARG)*1.8/PI                                            4MOD2690
        CSMH=1./(1.-SQRT(ANU*(1.-ANU)))                                 4MOD2700
C                                                                       4MOD2710
C       YSMC=AGMA TOOTH FORM FACTOR                                     4MOD2720
C                                                                       4MOD2730
        ARG=(1.5/(X*CSMH))-(TAN(PHILN)/T)                               4MOD2740
        ARG1=COS(PHILN)/COS(PHIN(IRED))                                 4MOD2750
        YSMC=PND(IRED)/(ARG*ARG1)                                       4MOD2760
C                                                                       4MOD2770
C       KF=THEORETICAL STRESS CORRECTION FACTOR; AH, AL, AND AM ARE     4MOD2780
C       THE H, L, AND M CONSTANTS FROM AGMA 226.01, APPENDIX E, USED    4MOD2790
C       TO COMPUTE KF                                                   4MOD2800
C                                                                       4MOD2810
        AH=AGMAE1(PHIN(IRED),1)                                         4MOD2820
        AL=AGMAE1(PHIN(IRED),2)                                         4MOD2830
        AM=AGMAE1(PHIN(IRED),3)                                         4MOD2840
        RAT1=T/RF                                                       4MOD2850
```

```
      RAT2=T/H                                                          4MOD2860
      KF=AH+(RAT1**AL)*(RAT2**AM)                                       4MOD2870
C                                                                       4MOD2880
C     MN=LOAD SHARING RATIO                                             4MOD2890
C                                                                       4MOD2900
      MN=SHRLD(IRED,DP,DG)                                              4MOD2910
C                                                                       4MOD2920
C     GEOMETRY FACTOR J                                                 4MOD2930
C                                                                       4MOD2940
      GEOMJ=YSMC*COS(HELIX(IRED))*COS(HELIX(IRED))/(KF*MN)              4MOD2950
      RETURN                                                            4MOD2960
      END                                                               4MOD2970
C*****************************************************************    4MOD2980
C     *     *     *     *     *     *     *     *     *     *     *     4MOD2990
C*****************************************************************    4MOD3000
      FUNCTION POWERB (RPM,FACE,D,IRED,IPWR,IGR,GEOMJ)                  4MOD3010
C                                                                       4MOD3020
C     CODED BY:  LT J.L. PAQUETTE, USN          JAN 1982                4MOD3030
C                NAVAL POSTGRADUATE SCHOOL  MONTEREY, CA 93940          4MOD3040
C                                                                       4MOD3050
C     SUBPROGRAM TO COMPUTE THE ALLOWABLE SERVICE POWER FOR A GEAR PAIR 4MOD3060
C     BASED ON AGMA'S STRENGTH RATING (AGMA 221.02 JUL 1965)            4MOD3070
C                                                                       4MOD3080
C     RPM     PINION SPEED IN RPM                                       4MOD3090
C     FACE    FACEWIDTH OF THE GEAR PAIR IN INCHES                      4MOD3100
C     D       PITCH DIAMETER OF THE PINION IN INCHES                    4MOD3110
C     GEOMJ   STRENGTH GEOMETRY FACTOR, J                               4MOD3120
C     IRED    REDUCTION STAGE UNDER CONSIDERATION                       4MOD3130
C     IPWR    POWER SOURCE IDENTIFICATION                               4MOD3140
C     IGR     GEAR IDENTIFICATION (1=PINION, 2=GEAR)                    4MOD3150
C                                                                       4MOD3160
      COMMON /AGMAB/ SFB(2,2),AKV,AKS,AKM,AKO(2),SAT(6),AKL(2),AKR(6),AK4MOD3170
     1T                                                                 4MOD3180
      COMMON /DESDAT/ PWRIN(2),RPMIN(2),RPMOUT,DHELIX(3),HELIX(3),PD(3),4MOD3190
     1PND(3),DPHI(3),PHI(3),DPHIN(3),PHIN(3),NDIFP,IARR,IEPIC(3),IHARD(34MOD3200
     2,2),IOPRO,NPWRIN,IPWRSR(2),NRED,NPATH,NPLNT(3),NHELX              4MOD3210
```

```
C                                                                       4MOD3220
C     INITIALIZATION                                                    4MOD3230
C                                                                       4MOD3240
      IH=IHARD(IRED,IGR)                                                4MOD3250
      IP=IPWRSR(IPWR)                                                   4MOD3260
      NPTH=NPATH                                                        4MOD3270
      IF ((NRED.EQ.3).AND.(IRED.GE.2)) NPTH=2                           4MOD3280
C                                                                       4MOD3290
C     COMPUTE ALLOWABLE SERVICE POWER                                   4MOD3300
C                                                                       4MOD3310
      ANUM=RPM*D*AKV*GEOMJ*SAT(IH)*AKL(IOPRO)                           4MOD3320
      DEN=SFB(IOPRO,IP)*AKO(NPTH)*AKM*AKS*AKR(IH)*AKT*PD(IRED)          4MOD3330
      POWERB=FACE*ANUM/(126050.*DEN)                                    4MOD3340
      RETURN                                                            4MOD3350
      END                                                               4MOD3360
C*****************************************************************    4MOD3370
C     *     *     *     *     *     *     *     *     *     *     *     4MOD3380
C*****************************************************************    4MOD3390
      FUNCTION POWERH (RPM,FACE,D,IRED,IPWR,GEOMI)                      4MOD3400
C                                                                       4MOD3410
C     CODED BY:  LT J.L. PAQUETTE, USN          JAN 1982                4MOD3420
C                NAVAL POSTGRADUATE SCHOOL  MONTEREY, CA 93940          4MOD3430
C                                                                       4MOD3440
C     SUBPROGRAM TO COMPUTE THE ALLOWABLE SERVICE POWER OF A GEAR PAIR  4MOD3450
C     BASED ON AGMA'S DURABILITY RATING (AGMA 211.02 SEPT 1966)         4MOD3460
C                                                                       4MOD3470
C     RPM     PINION SPEED IN RPM                                       4MOD3480
C     FACE    FACEWIDTH OF THE GEAR PAIR IN INCHES                      4MOD3490
C     D       PITCH DIAMETER OF THE PINION IN INCHES                    4MOD3500
C     IRED    REDUCTION STAGE UNDER CONSIDERATION                       4MOD3510
C     IPWR    POWER SOURCE IDENTIFICATION                               4MOD3520
C     GEOMI   DURABILITY GEOMETRY FACTOR, I                             4MOD3530
C                                                                       4MOD3540
      COMMON /AGMAH/ SFH(2,2),CV(3),CS,CM(2),CF,CO(2),SAC(6),CP,CL(2),CH4MOD3550
     1,CT,CR(6)                                                         4MOD3560
      COMMON /DESDAT/ PWRIN(2),RPMIN(2),RPMOUT,DHELIX(3),HELIX(3),PD(3),4MOD3570
```

```
     1PND(3),DPHI(3),PHI(3),DPHIN(3),PHIN(3),NDIFP,IARR,IEPIC(3),IHARD(34MOD3580
     2,2),IOPRO,NPWRIN,IPWRSR(2),NRED,NPATH,NPLNT(3),NHELX              4MOD3590
C                                                                       4MOD3600
C      INITIALIZATION                                                   4MOD3610
C                                                                       4MOD3620
       IH=IHARD(IRED,1)                                                 4MOD3630
       IP=IPWRSR(IPWR)                                                  4MOD3640
C                                                                       4MOD3650
C      COMPUTE ALLOWABLE SERVICE POWER                                  4MOD3660
C                                                                       4MOD3670
       BRAC=SAC(IH)*D*CL(IOPRO)*CH/(CP*CT*CR(IH))                       4MOD3680
       ANUM=RPM*GEOMI*CV(IRED)*BRAC*BRAC                                4MOD3690
       DEN=SFH(IOPRO,IP)*CS*CM(IOPRO)*CF*CO(IOPRO)                      4MOD3700
       POWERH=FACE*ANUM/(126050.*DEN)                                   4MOD3710
       RETURN                                                           4MOD3720
       END                                                              4MOD3730
C**********************************************************************4MOD3740
C     *     *     *     *     *     *     *     *     *     *     *     *4MOD3750
C**********************************************************************4MOD3760
       FUNCTION RNDGEN (RO)                                             4MOD3770
       PI=3.14159286745534                                              4MOD3780
       A=(PI+RO)**5.                                                    4MOD3790
       I=IFIX(A)                                                        4MOD3800
       RNDGEN=A-FLOAT(I)                                                4MOD3810
       RETURN                                                           4MOD3820
       END                                                              4MOD3830
C**********************************************************************4MOD3840
C     *     *     *     *     *     *     *     *     *     *     *     *4MOD3850
C**********************************************************************4MOD3860
       FUNCTION RTFNDR (AX,BX,F,CNST,TOL)                               4MOD3870
C                                                                       4MOD3880
C         THIS FUNCTION SUBPROGRAM IS A SLIGHTLY MODIFIED               4MOD3890
C      VERSION OF THE FUNCTION SUBPROGRAM ZEROIN GIVEN IN               4MOD3900
C      FORSYTHE, MALCOLM, AND MOLER, COMPUTER METHODS FOR               4MOD3910
C      MATHEMATICAL COMPUTATIONS, PRENTICE-HALL,INC. (1977).            4MOD3920
C                           LT J.L. PAQUETTE, USN  JAN 1982             4MOD3930
```

```
C                                                                       4MOD3940
C     SUBPROGRAM TO FIND A ROOT OF F(X) IN THE INTERVAL AX,BX           4MOD3950
C                                                                       4MOD3960
C     AX     LEFT ENDPOINT OF INITIAL INTERVAL                          4MOD3970
C     BX     RIGHT ENDPOINT OF INITIAL INTERVAL                         4MOD3980
C     F      FUNCTION SUBPROGRAM FOR EVALUATION OF F(X)                 4MOD3990
C     CNST   PARAMETER LIST OF CONSTANTS REQUIRED IN F(X)               4MOD4000
C     TOL    DESIRED LENGTH OF INTERVAL OF UNCERTAINTY OF               4MOD4010
C            THE FINAL RESULT                                           4MOD4020
C                                                                       4MOD4030
C     IT IS ASSUMED THAT F(AX) AND F(BX) HAVE OPPOSITE SIGNS            4MOD4040
C     WITHOUT A CHECK.  RTFNDR RETURNS A ROOT, X, IN THE                4MOD4050
C     INTERVAL AX,BX TO WITHIN A TOLERANCE OF 4*EPS*ABS(X)+TOL          4MOD4060
C     WHERE EPS IS THE RELATIVE MACHINE PRECISION.                      4MOD4070
C                                                                       4MOD4080
      DIMENSION CNST(5)                                                 4MOD4090
C                                                                       4MOD4100
C     COMPUTE EPS, THE RELATIVE MACHINE PRECISION                       4MOD4110
C                                                                       4MOD4120
      EPS=1.0                                                           4MOD4130
10    EPS=EPS/2.0                                                       4MOD4140
      TOL1=1.0+EPS                                                      4MOD4150
      IF (TOL1.GT.1.0) GO TO 10                                         4MOD4160
C                                                                       4MOD4170
C     INITIALIZATION                                                    4MOD4180
C                                                                       4MOD4190
      A=AX                                                              4MOD4200
      B=BX                                                              4MOD4210
      FA=F(A,CNST)                                                      4MOD4220
      FB=F(B,CNST)                                                      4MOD4230
C                                                                       4MOD4240
C     BEGIN STEP                                                        4MOD4250
C                                                                       4MOD4260
20    C=A                                                               4MOD4270
      FC=FA                                                             4MOD4280
      D=B-A                                                             4MOD4290
```

```
      E=D                                                          4MOD4300
30    IF (ABS(FC).GE.ABS(FB)) GO TO 40                             4MOD4310
      A=B                                                          4MOD4320
      B=C                                                          4MOD4330
      C=A                                                          4MOD4340
      FA=FB                                                        4MOD4350
      FB=FC                                                        4MOD4360
      FC=FA                                                        4MOD4370
C                                                                  4MOD4380
C     CONVERGENCE TEST                                             4MOD4390
C                                                                  4MOD4400
40    TOL1=2.*EPS*ABS(B)+.5*TOL                                    4MOD4410
      XM=.5*(C-B)                                                  4MOD4420
      IF (ABS(XM).LE.TOL1) GO TO 90                                4MOD4430
      IF (FB.EQ.0.0) GO TO 90                                      4MOD4440
C                                                                  4MOD4450
C     BISECTION REQUIREMENT TEST                                   4MOD4460
C                                                                  4MOD4470
      IF (ABS(E).LT.TOL1) GO TO 70                                 4MOD4480
      IF (ABS(FA).LE.ABS(FB)) GO TO 70                             4MOD4490
C                                                                  4MOD4500
C     QUADRATIC INTERPOLATION TEST                                 4MOD4510
C                                                                  4MOD4520
      IF (A.NE.C) GO TO 50                                         4MOD4530
C                                                                  4MOD4540
C     LINEAR INTERPOLATION                                         4MOD4550
C                                                                  4MOD4560
      S=FB/FA                                                      4MOD4570
      P=2.*XM*S                                                    4MOD4580
      Q=1.-S                                                       4MOD4590
      GO TO 60                                                     4MOD4600
C                                                                  4MOD4610
C     INVERSE QUADRATIC INTERPOLATION                              4MOD4620
C                                                                  4MOD4630
50    Q=FA/FC                                                      4MOD4640
      R=FB/FC                                                      4MOD4650
```

```
      S=FB/FA                                                          4MOD4660
      P=S*(2.*XM*Q*(Q-R)-(B-A)*(R-1.))                                 4MOD4670
      Q=(Q-1.)*(R-1.)*(S-1.)                                           4MOD4680
C                                                                      4MOD4690
C     ADJUST SIGNS                                                     4MOD4700
C                                                                      4MOD4710
60    IF (P.GT.0.0) Q=-Q                                               4MOD4720
      P=ABS(P)                                                         4MOD4730
C                                                                      4MOD4740
C     INTERPOLATION ACCEPTABILITY TEST                                 4MOD4750
C                                                                      4MOD4760
      T1=2.*P                                                          4MOD4770
      T2=3.*XM*Q-ABS(TOL1*Q)                                           4MOD4780
      T3=ABS(.5*E*Q)                                                   4MOD4790
      IF (T1.GE.T2) GO TO 70                                           4MOD4800
      IF (P.GE.T3) GO TO 70                                            4MOD4810
      E=D                                                              4MOD4820
      D=P/Q                                                            4MOD4830
      GO TO 80                                                         4MOD4840
C                                                                      4MOD4850
C     BISECTION                                                        4MOD4860
C                                                                      4MOD4870
70    D=XM                                                             4MOD4880
      E=D                                                              4MOD4890
C                                                                      4MOD4900
C     COMPLETE STEP                                                    4MOD4910
C                                                                      4MOD4920
80    A=B                                                              4MOD4930
      FA=FB                                                            4MOD4940
      IF (ABS(D).GT.TOL1) B=B+D                                        4MOD4950
      IF (ABS(D).LE.TOL1) B=B+SIGN(TOL1,XM)                            4MOD4960
      FB=F(B,CNST)                                                     4MOD4970
      T1=FB*(FC/ABS(FC))                                               4MOD4980
      IF (T1.GT.0.0) GO TO 20                                          4MOD4990
      GO TO 30                                                         4MOD5000
C                                                                      4MOD5010
```

```
C     ROUTINE COMPLETED                                                      4MOD5020
C                                                                            4MOD5030
90    RTFNDR=B                                                               4MOD5040
      RETURN                                                                 4MOD5050
      END                                                                    4MOD5060
C*******************************************************************************4MOD5070
C     !     *     *     *     *     *     *     *     *     *     *     *     * 4MOD5080
C*******************************************************************************4MOD5090
      FUNCTION SHRLD (IRED,DP,DG)                                            4MOD5100
C                                                                            4MOD5110
C     CODED BY:  LT J.L. PAQUETTE, USN            JAN 1982                 4MOD5120
C                NAVAL POSTGRADUATE SCHOOL  MONTEREY, CA 93940             4MOD5130
C                                                                            4MOD5140
C     SUBPROGRAM TO COMPUTE THE LOAD SHARING RATIO, MN=PN/(.95*Z)            4MOD5150
C                                                                            4MOD5160
C     IRED  REDUCTION STAGE UNDER CONSIDERATION                              4MOD5170
C     DP    DIAMETER OF THE PINION                                           4MOD5180
C     DG    DIAMETER OF THE GEAR                                             4MOD5190
C                                                                            4MOD5200
      COMMON /DESDAT/ PWRIN(2),RPMIN(2),RPMOUT,DHELIX(3),HELIX(3),PD(3),4MOD5210
     1PND(3),DPHI(3),PHI(3),DPHIN(3),PHIN(3),NDIFP,IARR,IEPIC(3),IHARD(34MOD5220
     2,2),IOPRO,NPWRIN,IPWRSR(2),NRED,NPATH,NPLNT(3),NHELX                  4MOD5230
      PI=4.*ATAN(1.)                                                         4MOD5240
      PN=(PI/PND(IRED))*COS(PHIN(IRED))                                      4MOD5250
      DGB=DG*COS(PHI(IRED))                                                  4MOD5260
      DPB=DP*COS(PHI(IRED))                                                  4MOD5270
      DGO=DG+(2./PD(IRED))                                                   4MOD5280
      DPO=DP+(2./PD(IRED))                                                   4MOD5290
      Z=.5*(SQRT(DGO*DGO-DGB*DGB)+SQRT(DPO*DPO-DPB*DPB)-SQRT(DG*DG-DGB*D4MOD5300
     1GB)-SQRT(DP*DP-DPB*DPB))                                              4MOD5310
      SHRLD=PN/(.95*Z)                                                       4MOD5320
      RETURN                                                                 4MOD5330
      END                                                                    4MOD5340
C*******************************************************************************4MOD5350
C     *     *     *     *     *     *     *     *     *     *     *     *     * 4MOD5360
C*******************************************************************************4MOD5370
```

```
      FUNCTION THICK (D,DB,DT,T,III)                                    4MOD5380
C                                                                       4MOD5390
C     CODED BY:  LT J.L. PAQUETTE, USN           JAN 1982               4MOD5400
C                NAVAL POSTGRADUATE SCHOOL  MONTEREY, CA 93940          4MOD5410
C                                                                       4MOD5420
C     SUBPROGRAM TO COMPUTE THE THICHNESS OF A TOOTH BASED ON           4MOD5430
C     A THICKNESS KNOWN AT A SPECIFIED DIAMETER                         4MOD5440
C                                                                       4MOD5450
C     D    REFERENCE DIAMETER OF KNOWN THICKNESS (USUALLY PITCH DIAM.)  4MOD5460
C     DB   BASE DIAMETER OF THE GEAR                                    4MOD5470
C     DT   DIAMETER AT WHICH THE THICKNESS IS TO BE COMPUTED            4MOD5480
C     T    KNOWN THICKNESS AT REFERENCE DIAMETER                        4MOD5490
C     III  0 FOR EXTERNAL GEARS; 1 FOR INTERNAL GEARS                   4MOD5500
C                                                                       4MOD5510
C     EXTERNAL SUBPROGRAM(S) REQUIRED: FUNCTION ARCCOS                  4MOD5520
C                                                                       4MOD5530
      REAL INV                                                          4MOD5540
      INV(X)=TAN(X)-X                                                   4MOD5550
      PHI=ARCCOS(DB,D)                                                  4MOD5560
      PHIT=ARCCOS(DB,DT)                                                4MOD5570
      IF (III.EQ.1) GO TO 10                                            4MOD5580
      THICK=DT*((T/D)+INV(PHI)-INV(PHIT))                               4MOD5590
      RETURN                                                            4MOD5600
10    THICK=DT*((T/D)-INV(PHI)+INV(PHIT))                               4MOD5610
      RETURN                                                            4MOD5620
      END                                                               4MOD5630
```

APPENDIX E

FIGURES

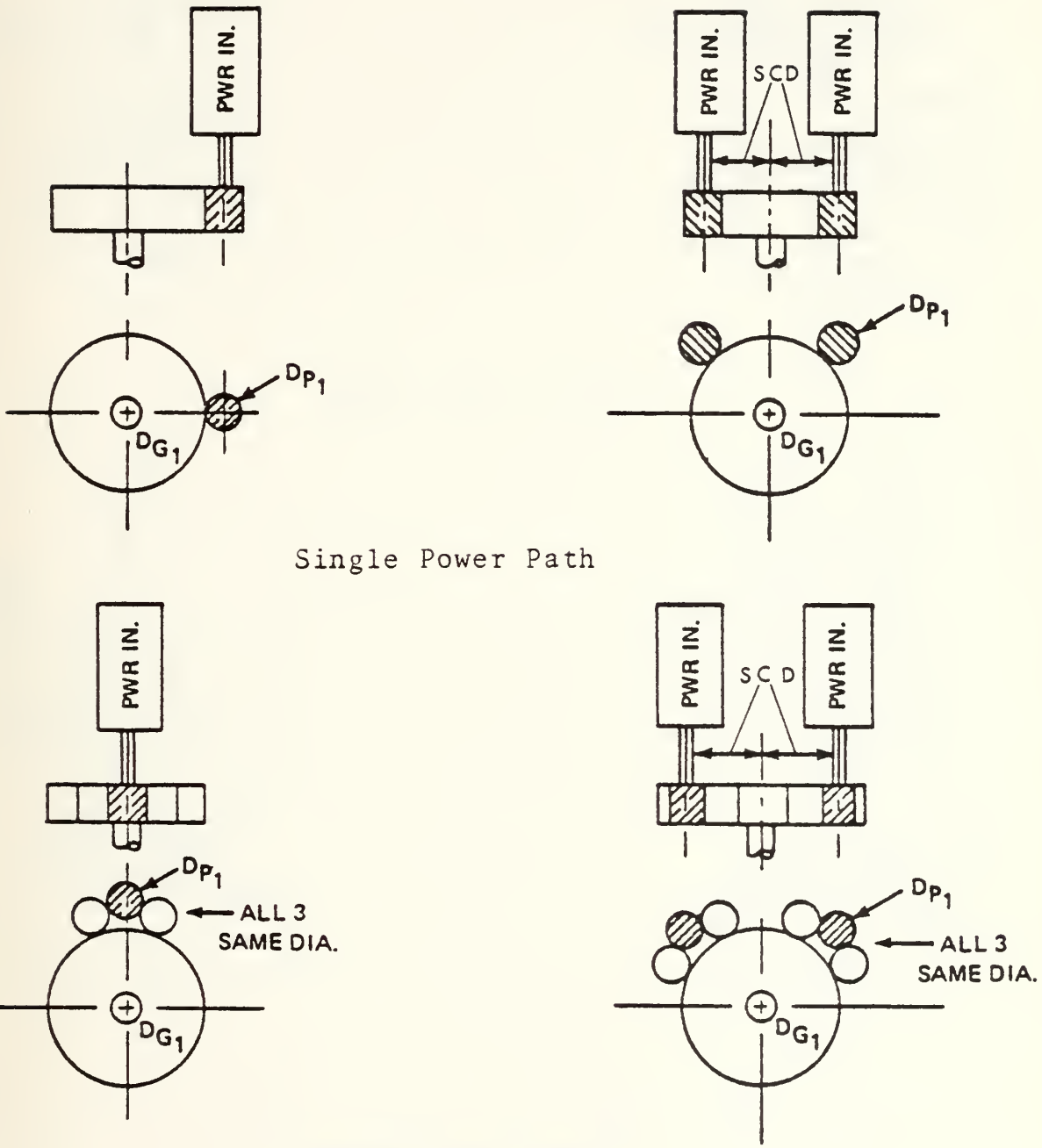


Figure 1: Single Reduction Parallel Axis Arrangements

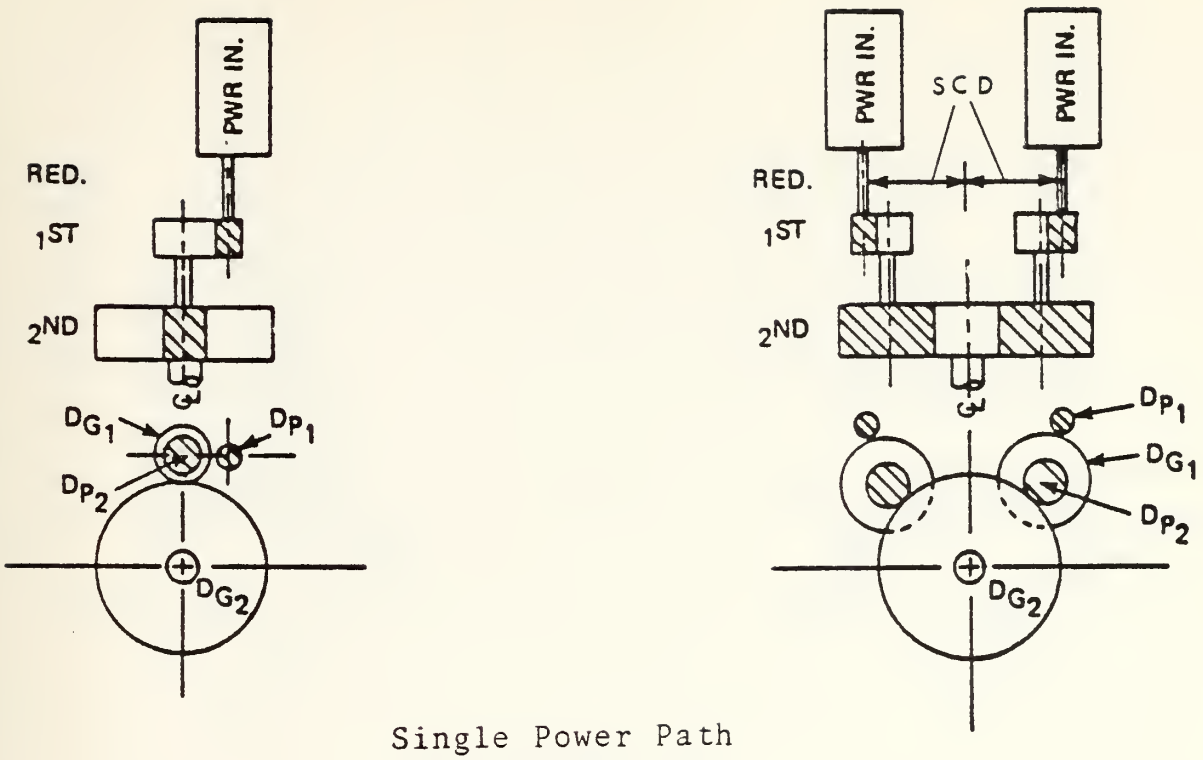


Single Power Path

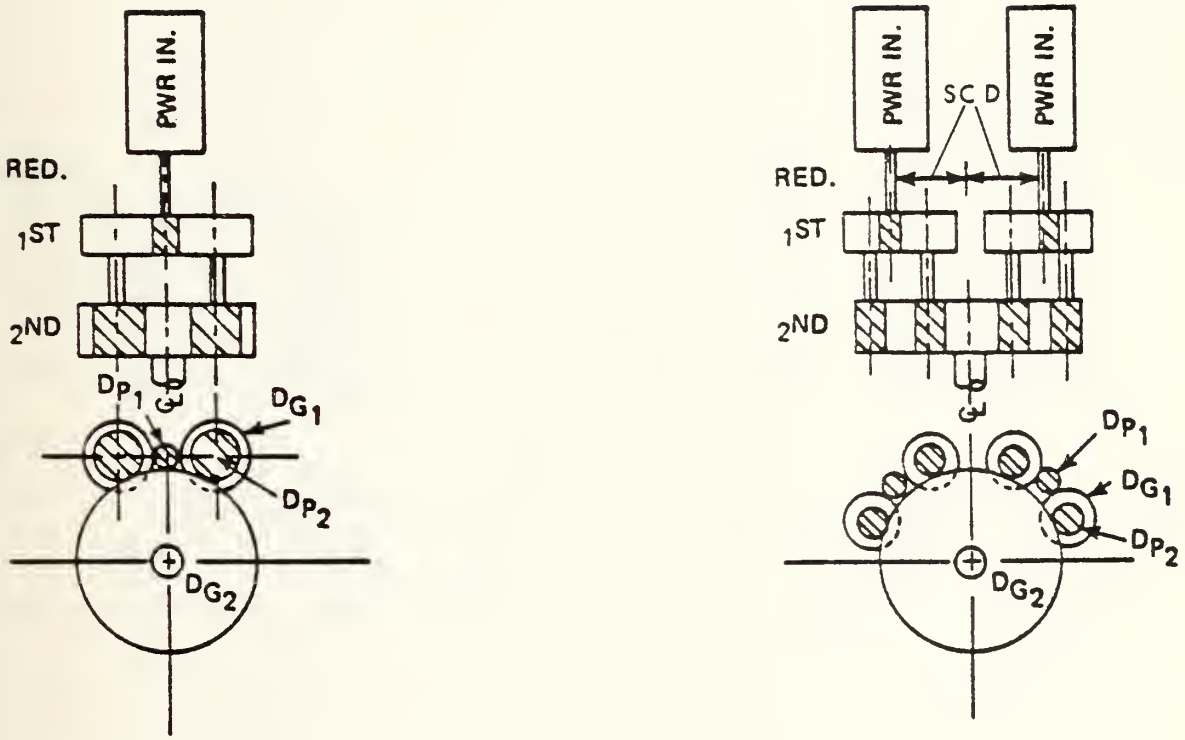


Double Power Path

Figure 2: Double Reduction Parallel Axis Arrangements

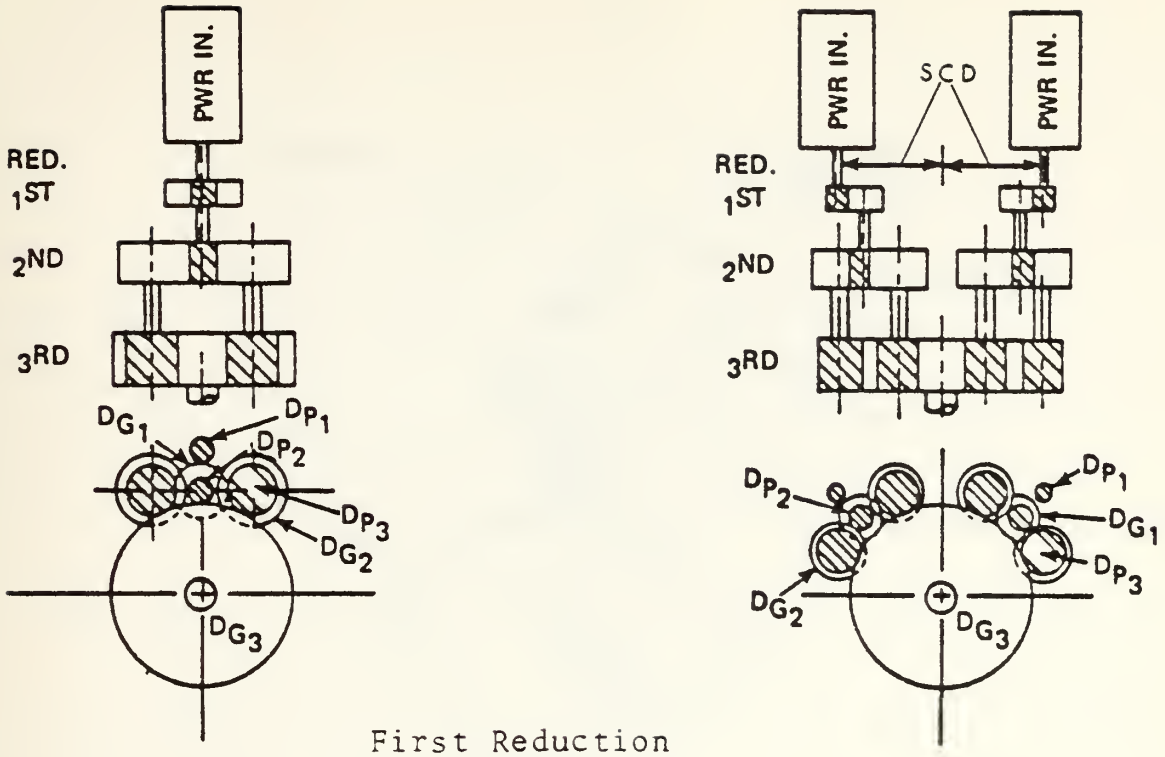


First Reduction
Single Power Path

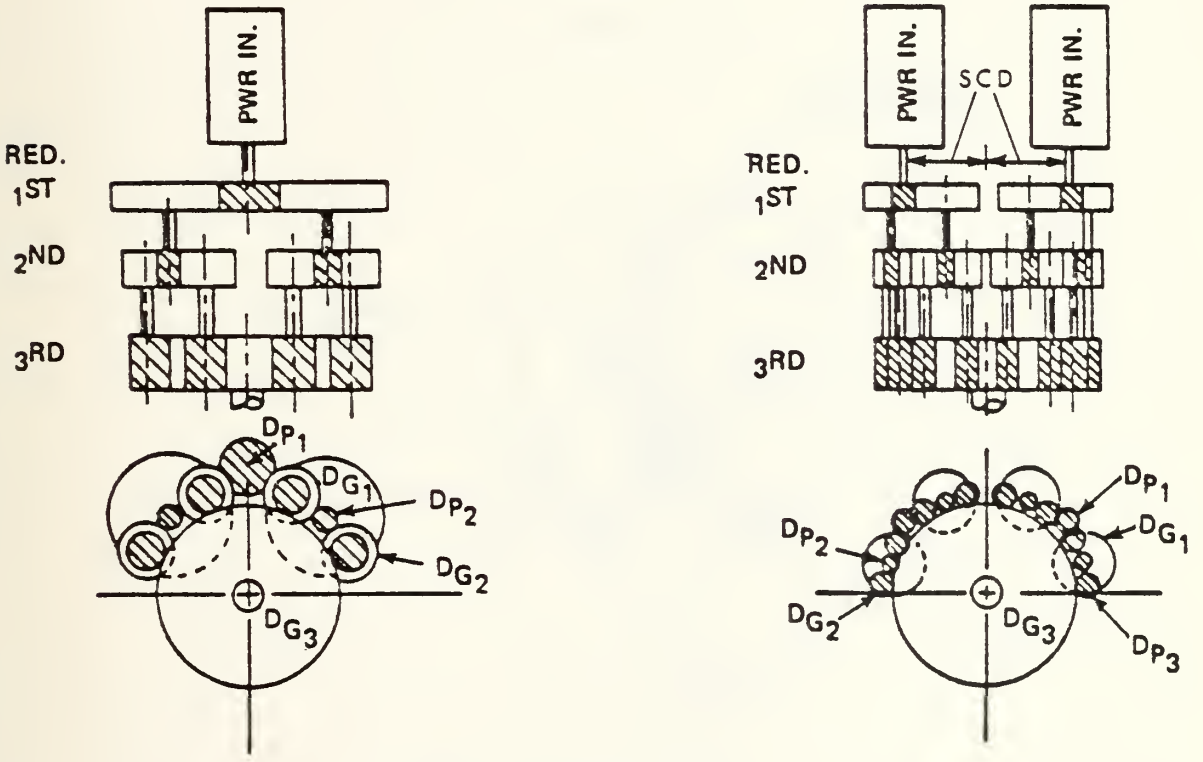


Double Power Paths

Figure 3: Triple Reduction Parallel Axis Arrangements

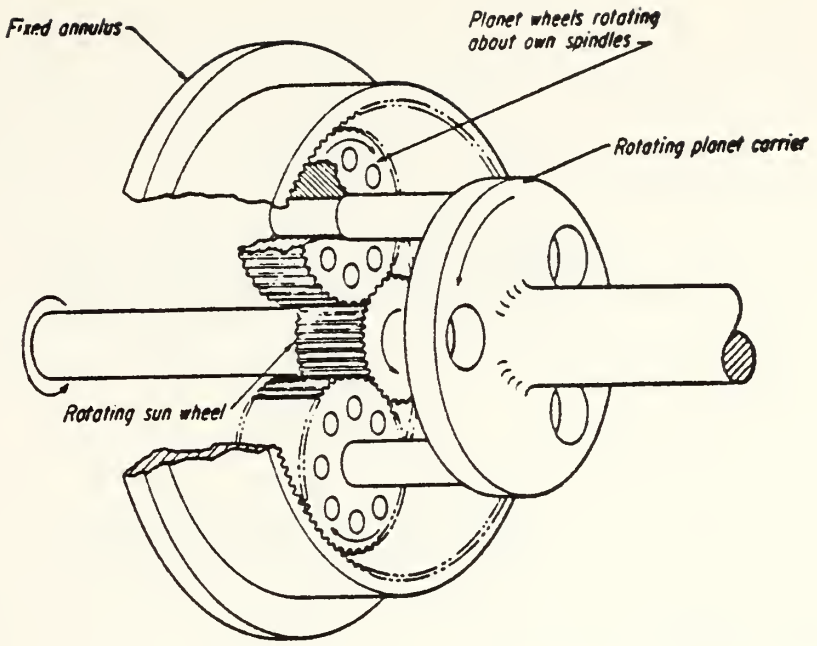


Planetary

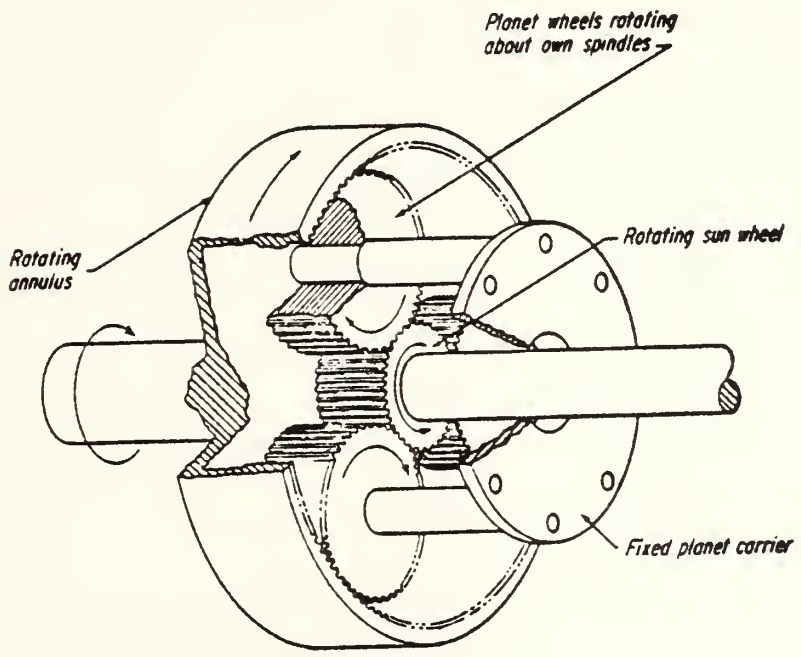


Star

Figure 4: Single Reduction Epicyclic Arrangements (from Ref. 7)

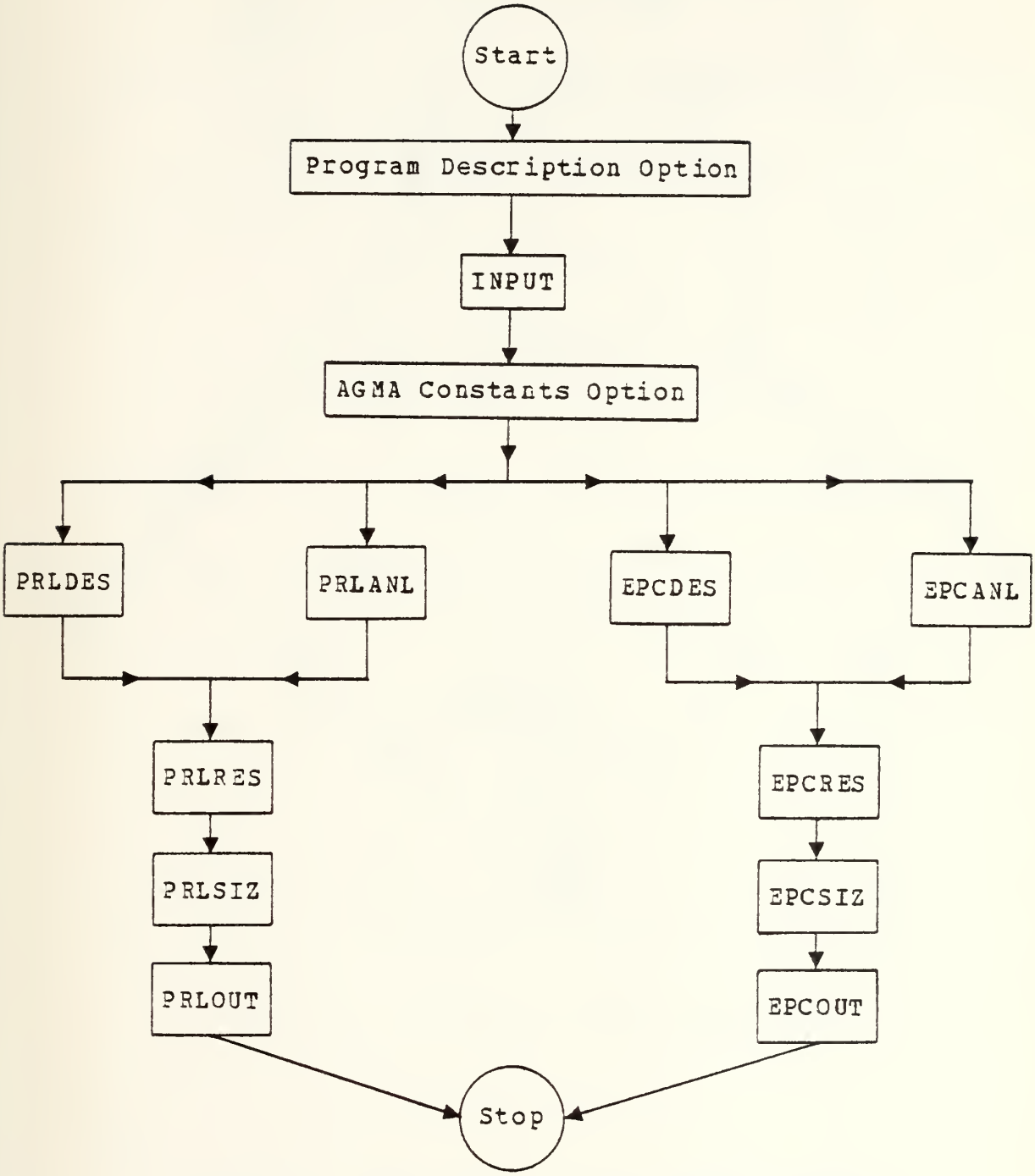


Figure 5: Flow Chart of the REGAD Package

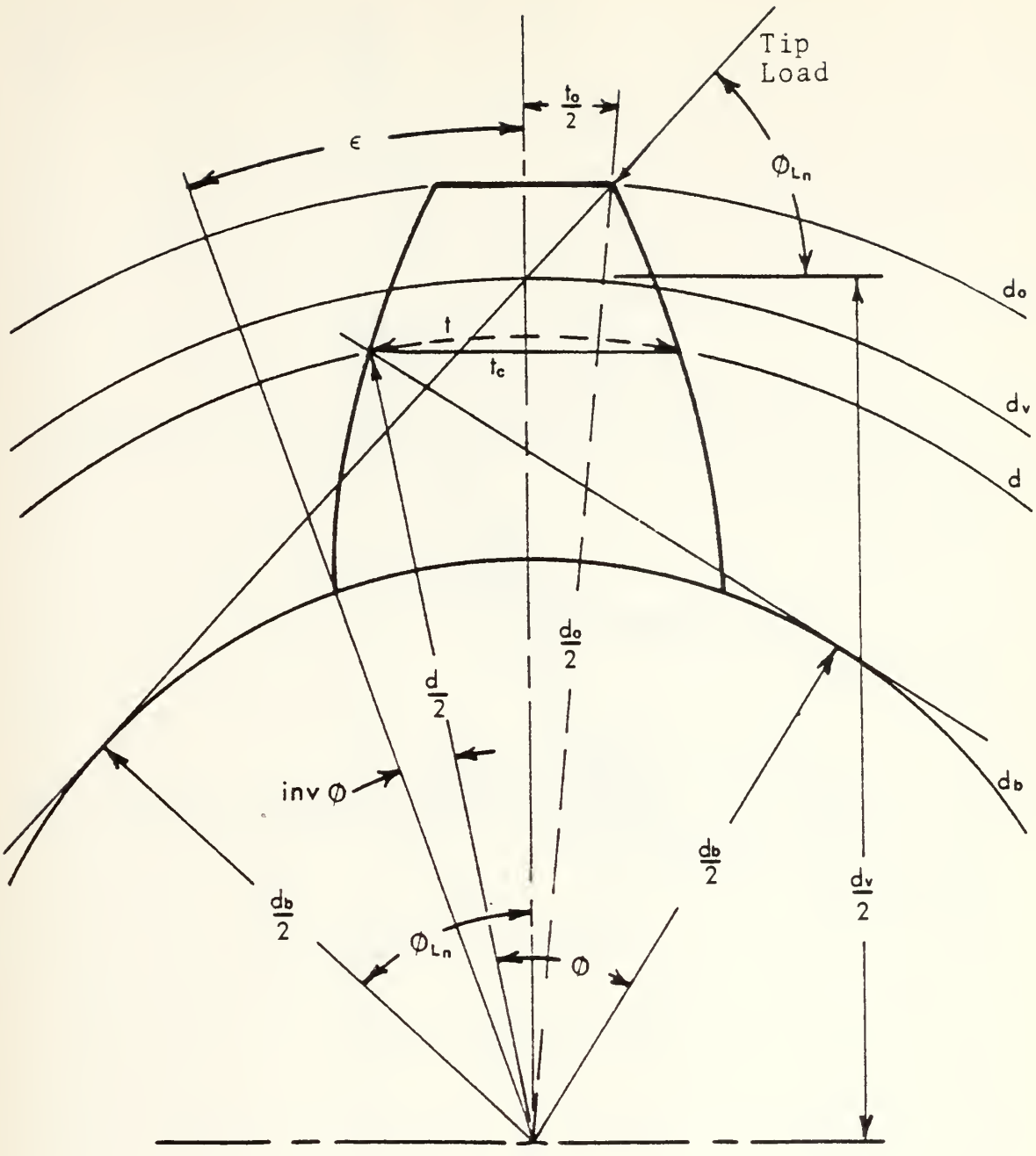


Figure 6: External Tooth Dimensions

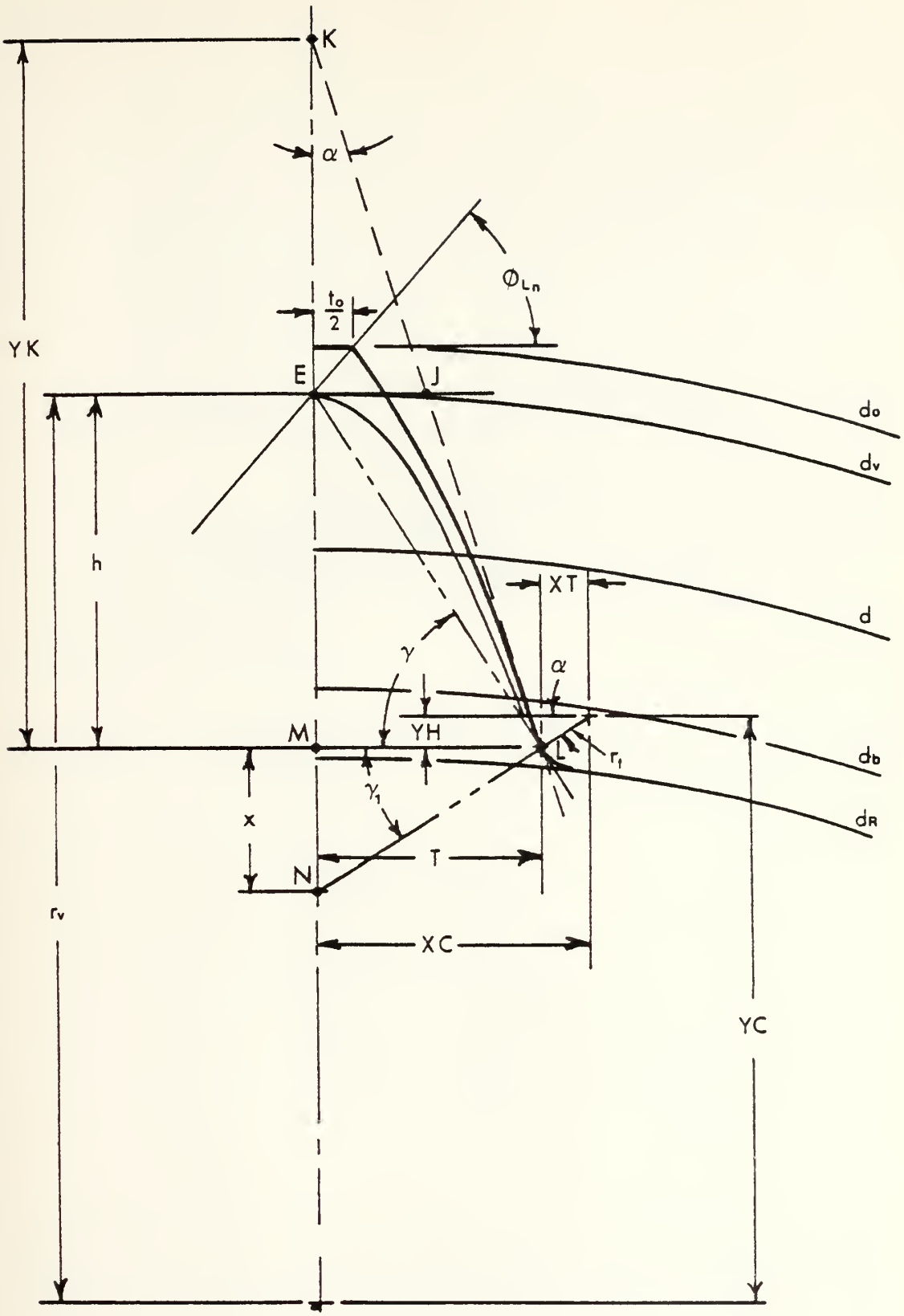


Figure 7: External Tooth Form Layout

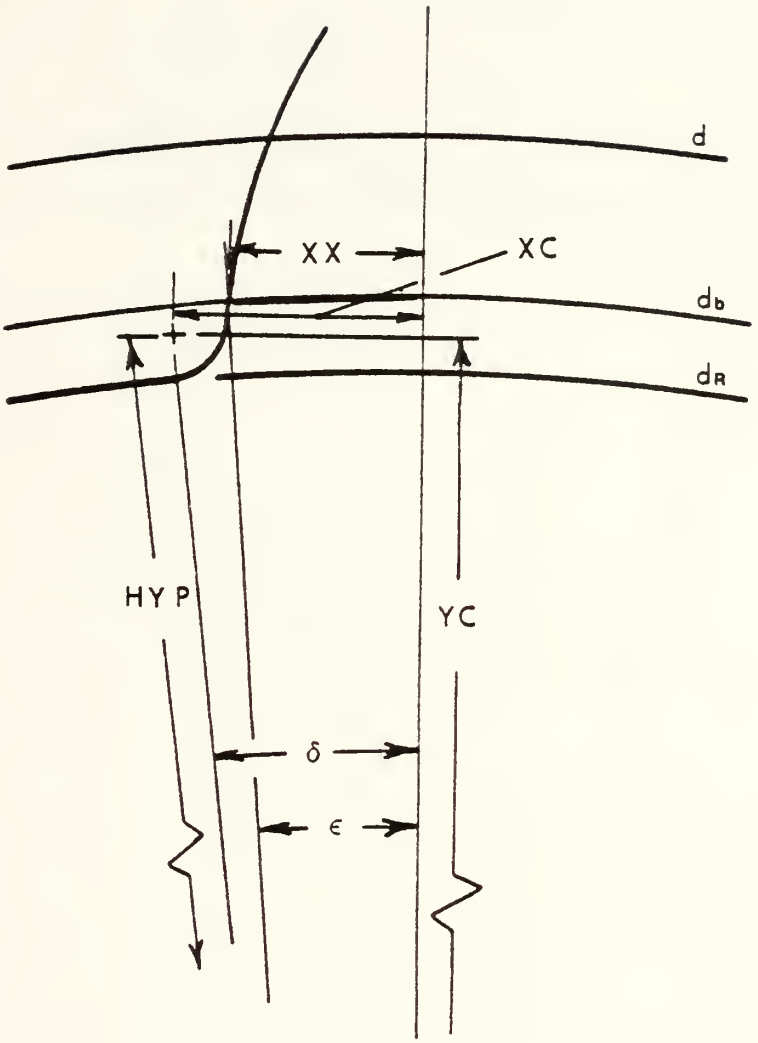


Figure 8: Fillet Center Location - Inside Base Circle

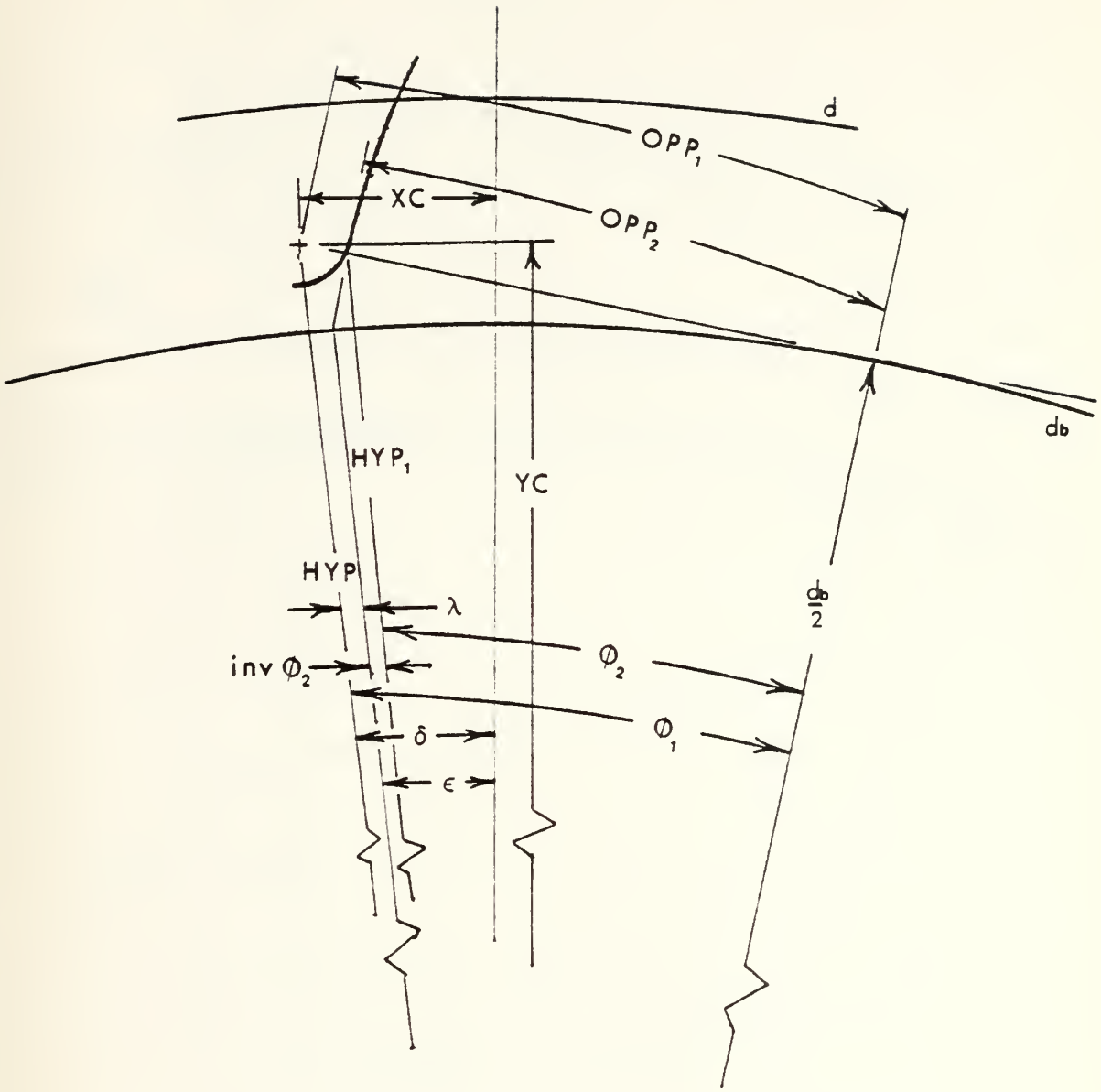


Figure 9: Fillet Center Location - Outside Base Circle

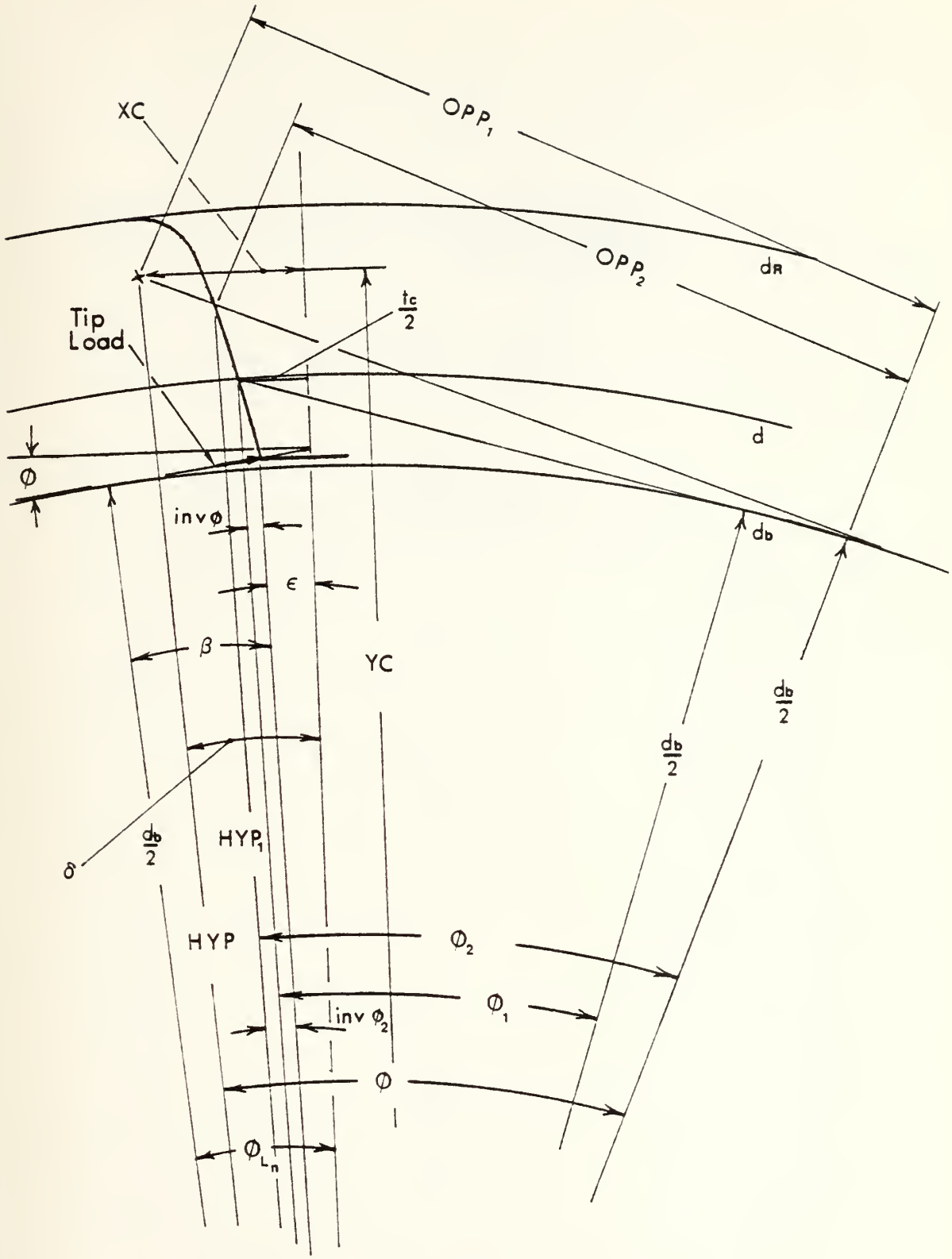


Figure 10: Internal Tooth Dimensions

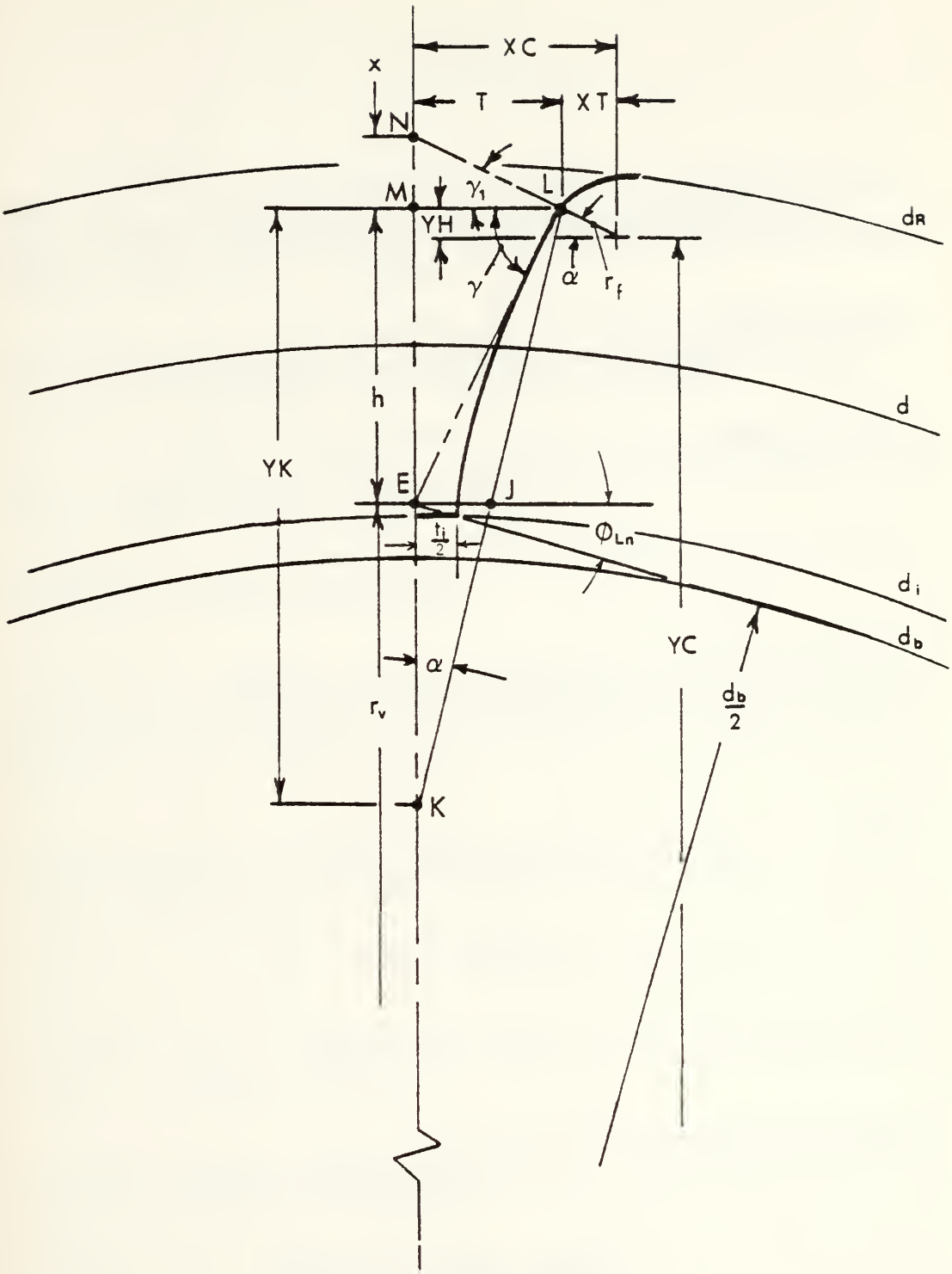


Figure 11: Internal Tooth Form Layout

# LIST OF REFERENCES


1. American Gear Manufacturers Association, AGMA Information Sheet - Geometry Factors for Determining the Strength of Spur, Helical, Herringbone and Bevel Gear Teeth (AGMA 226.01), August, 1970.

2. American Gear Manufacturers Association, AGMA Standard for Surface Durability (Pitting) of Helical and Herringbone Gear Teeth (AGMA 211.02), September, 1966.

3. American Gear Manufacturers Association, AGMA Standard for Rating the Strength of Helical and Herringbone Gear Teeth (AGMA 221.02), July, 1965.

4. Thoma, F.A., "An Up-to-Date Look at Marine Gear Tooth Loading," Marine Technology, v. 7, p. 133-148, April 1970.

5. Thoma, F.A., Let's Up-Date Marine Gear Tooth Bending Stress Calculations, paper presented at the Mechanisms Conference & International Symposium on Gearing and Transmissions, San Francisco, California, 8-12 October 1972.

6. Forsythe, G.E., Malcolm, M.A., and Moler, C.B., Computer Methods for Mathematical Computations, p. 161-166, Prentice-Hall, Inc., 1977.

7. Dudley, D.W., ed., Gear Handbook, McGraw-Hill Book Company, Inc., 1962.

8. Benford, R.L., "Numerical Rules for Designing Planetary Gears," Machine Design, v. 30, p. 129-135, 21 August 1958.

9. Allison Division Report EDR 5503, Advancement of Helical Gear Design Technology, by W.L. McIntire and T.A. Lyon, p. 155-192, July 1968.

10. Dudley, D.W., Practical Gear Design, McGraw-Hill Book Company, Inc., 1954.

11. Gugliuzza, T.A. and Hargett, W.H., "Gear Design and Labratory Experience - Marine Gas Turbine Propulsion," Journal of Engineering for Power, v. 91, October 1969.

12. Harrington, R.L., ed., Marine Engineering, The Society of Naval Architects and Marine Engineers, 1971.

13. Shigley, J.E., Mechanical Engineering Design, 3rd ed., McGraw-Hill Book Company, Inc., 1977.

# INITIAL DISTRIBUTION LIST

| | | No. Copies |
|---|---|---|
| 1. | Defense Technical Information Center<br>Cameron Station<br>Alexandria, Virginia 22314 | 2 |
| 2. | Library, Code 0142<br>Naval Postgraduate School<br>Monterey, California 93940 | 2 |
| 3. | Chairman, Code 69Mx<br>Department of Mechanical Engineering<br>Naval Postgraduate School<br>Monterey, California 93940 | 1 |
| 4. | Professor Gilles Cantin, Code 69Ci<br>Department of Mechanical Engineering<br>Naval Postgraduate School<br>Monterey, California 93940 | 5 |
| 5. | Professor G. N. Vanderplaats, Code 69Vn<br>Department of Mechanical Engineering<br>Naval Postgraduate School<br>Monterey, California 93940 | 1 |
| 6. | LT Joseph L. Paquette, USN<br>19311 142nd Place SE<br>Renton, Washington 98055 | 3 |
| 7. | CAPT G. M. Lachance, USN<br>Code SEA 52<br>Naval Sea Systems Command<br>Naval Sea Systems Command Headquarters<br>Washington, D.C. 20362 | 1 |
| 8. | CDR W. L. Marsh, USN<br>Code SEA 50D<br>Naval Sea Systems Command<br>Naval Sea Systems Command Headquarters<br>Washington, D.C. 20362 | 1 |

| | | |
|---|---|---|
| 9. | Mr. K. Calvin<br>Code SEA 521<br>Naval Sea Systems Command<br>Naval Sea Systems Command Headquarters<br>Washington, D.C. 20362 | 10 |
| 10. | Mr. J. Kenworthy<br>Code SEA 5244<br>Naval Sea Systems Command<br>Naval Sea Systems Command Headquarters<br>Washington, D.C. 20362 | 1 |
| 11. | The Cincinnati Gear Company<br>ATTN: Mr. W. L. Rye<br>5657 Wooster Pike<br>Cincinnati, Ohio 45227 | 1 |
| 12. | Westinghouse Electric Corporation<br>ATTN: Mr. C. D. Grey<br>Marine Division Engineering<br>Sunnyvale, California 94088 | 1 |
| 13. | Westinghouse Electric Corporation<br>ATTN: Mr. K. L. Kaufman<br>Marine Division Engineering<br>Sunnyvale, California 94088 | 1 |

Thesis
P1477 Paquette
c.1 An interactive computer program for the preliminary design and analysis of marine reduction gears.
197570
27 JAN 97 37201
27 JAN 97 37201

Thesis
P1477 Paquette
c.1 An interactive computer program for the preliminary design and analysis of marine reduction gears.
197570

thesP1477
An interactive computer program for the
3 2768 001 97172 4
DUDLEY KNOX LIBRARY